ReliaMAX

Reliable Performance & Maximum Value

Lubrication System Fittings

45 Years Lubrication Technologies, Inc.

AN UNCOMMON TECHNICAL RESOURCE

SEPARATING SURFACES SINCE '76

LUBRICATION SYSTEMS ILC

Exclusive United States Distributor

Series Progressive Lubrication Systems Experts

Compression Fittings

Push To Connect Fittings

Threaded Hose Sleeves for Resuable Ends

Tube Sockets Tube Studs - Hose studs

Adapters - Extensions Reducers

8.6MM High Pressure Hose

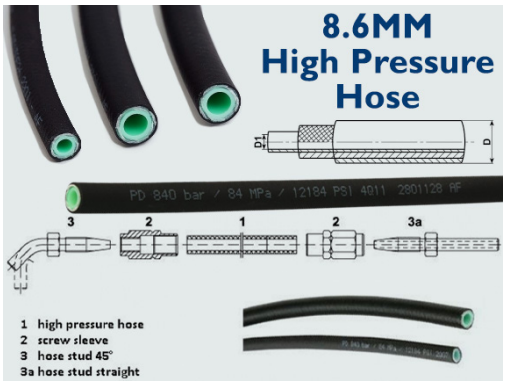

120 Bosworth Street, West Springfield MA 01089

413-788-LUBE (5823)

www.LubeTechnologies.com

COMPRESSION FITTINGS - ELBOW SCREW

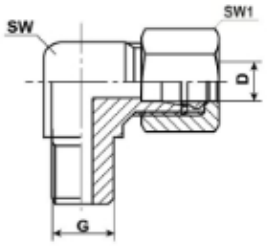

Steel zinc / steel zinc-nickel / Cr-VI free

Item No.	Description	D	G	SW	SW1	Serie	Bag	Box
104-101	WE04-LL M6x1	4	6 x 1 tap	9	10	LL	50	500
104-102	WE04-LL M8x1	4	8 x 1 tap	9	10	LL	50	500
104-102-8x1,25	WE04-LL M8x1,25	4	8 x 1,25 tap	9	10	LL	50	500
104-103	WE04-LL M10x1	4	10 x 1 tap	11	10	LL	50	500
104-104	WE04-LL R1/8BSPT	4	R 1/8 BSP / tap	11	10	LL	50	500
106-101	WE06-LL M6x1	6	6 x 1 tap	11	12	LL	100	500
106-102	WE06-LL M8x1	6	8 x 1 tap	11	12	LL	100	500
106-102-8x1,25	WE06-LL M8x1,25	6	8 x 1,25 tap	11	12	LL	100	500
106-103	WE06-LL M10x1	6	10 x 1 tap	11	12	LL	100	500
106-103-L	WE06-L M10x1	6	10 x 1 tap	12	14	L	50	500
106-104	WE06-LL R1/8BSPT	6	R 1/8 BSP / tap	11	12	LL	100	500
106-104-L	WE06-L R1/8BSPT	6	R 1/8 BSP / tap	12	14	L	50	500
106-105-L	WE06-L R1/4BSPT	6	R 1/4 BSP / tap	12	14	L	50	500
106-104-NPT	WE06-LL 1/8NPT	6	1/8 NPT	11	12	LL	100	500
1010-005	WE06-LL1/4-28UNF	6	14 - 28 UNF	11	12	LL	100	500
108-103	WE08-LL M10x1	8	10x1 / tap	12	14	LL	50	500
108-104	WE08-LL R1/8BSPT	8	R 1/8 BSP / tap	12	14	LL	50	500
108-104-L	WE08-L R1/8BSPT	8	R 1/8 BSP / tap	12	14	L	50	500
108-105-L	WE08-L R1/4BSPT	8	R 1/4 BSP / tap	12	17	L	50	500
110-105-L	WE10-L R1/4BSPT	10	R 1/4 BSP / tap	14	19	L	50	250

Compression Fittings - Elbow Screw

Stainless steel 1.4401 / 316 / V4A

Item No.	Description	D	G	SW	SW1	Serie	Bag	Box
1010-001	WE04-LL M6x1	4	6 x 1 tap	9	10	LL	25	250
1010-002	WE04-LL M8x1	4	8 x 1 tap	9	10	LL	25	250
1010-003	WE04-LL M10x1	4	10 x 1 tap	11	10	LL	25	250
1010-004	WE04-LL R1/8 BSPT	4	R 1/8 BSP tap	11	10	LL	25	250
106-101-VA	WE06-LL M6x1	6	6 x 1 tap	11	12	LL	25	500
106-102-VA	WE06-LL M8x1	6	8 x 1 tap	11	12	LL	25	500
106-103-VA	WE06-LL M10x1	6	10 x 1 tap	11	12	LL	25	500
106-104-VA	WE06-LL R1/8BSPT	6	R 1/8 BSP / tap	11	12	LL	25	500
106-104-VA-L	WE06-L R1/8BSPT	6	R 1/8 BSP / tap	12	14	L	25	250
106-105-VA-L	WE06-L R1/4	6	R 1/4 BSP / tap	12	14	L	25	250
1010-006	WE06-LL R1/8NPT	6	1/8 NPT	11	12	LL	25	250
108-104-VA	WE08-L 1/8BSPT	8	R 1/8 BSP / tap	12	14	LL	25	250
108-104-VA-L	WE08-L R1/8BSPT	8	R 1/8 BSP / tap	12	17	L	25	125
108-105-VA-L	WE08-L R1/4BSPT	8	R 1/4 BSP / tap	12	17	L	25	125

COMPRESSION FITTINGS - STRAIGHT UNIONS

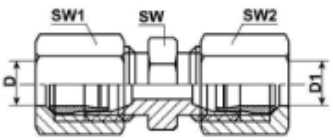

Steel zinc / steel zinc-nickel / Cr-VI free

Item No.	Description	D	D1	SW	SW1	SW2	Serie	Bag	Box
104-000	G04-LL	4	4	9	10	10	LL	50	500
104-000-6	GR06/04-LL	4	6	11	12	10	LL	50	500
106-000	G06-LL	6	6	11	12	12	LL	100	500
106-000-L	G06-L	6	6	12	14	14	L	50	500
106-000-8	GR08/06-LL	6	8	12	14	12	LL	50	500
106-000-10-L	GR10/06-L	6	10	17	19	14	L	50	500
108-000	G08-LL	8	8	12	14	14	LL	50	250
108-000-L	G08-L	8	8	14	17	17	L	50	250
110-000	G10-LL	10	10	14	17	17	LL	50	500
110-000-L	G10-L	10	10	17	19	19	L	50	250
110-000-8-L	GR10/08-L	8	10	17	19	17	L	50	500

Stainless steel 1.4401 / 316 / V4A

Item No.	Description	D	D1	SW	SW1	SW2	Serie	Bag	Box
104-000-VA	G04-LL	4	4	9	10	10	LL	25	250
1014-001	G06/04-LL	4	6	11	12	10	LL	25	250
106-000-VA	G06-LL	6	6	11	12	12	LL	25	250
106-000-VA-L	G06-L	6	6	12	14	14	L	25	250
108-000-VA	G08-LL	8	8	12	14	14	LL	25	250
108-000-VA-L	G08-L	8	8	14	17	17	L	25	125
110-000-VA-L	G10-L	10	10	17	19	19	L	25	125

Compression Fittings - Straight Screw Coupling

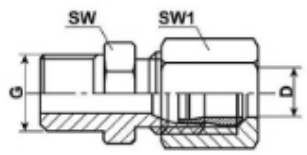

Steel zinc / steel zinc-nickel / Cr-VI free

Item No.	Description	D	G	SW	SW1	Serie	Bag	Box
104-001	GE04-LL M6x1	4	M 6 x 1 tap	9	10	LL	50	500
104-002	GE04-LL M8x1	4	M 8 x 1 tap	9	10	LL	50	500
104-002-8x1,25	GE04-LL M8x1,25	4	M 8 x 1,25 tap	9	10	LL	50	500
104-003	GE04-LL M10x1	4	M 10 x 1 tap	11	10	LL	50	500
104-004	GE04-LL 1/8BSPT	4	R 1/8 BSP tap	11	10	LL	50	500
106-001	GE06-LL M6x1	6	M 6 x 1 tap	11	12	LL	100	500
106-002	GE06-LL M8x1	6	M 8 x 1 tap	11	12	LL	100	500
106-002-8x1,25	GE06-LL M8x1,25	6	M 8 x 1,25 tap	11	12	LL	100	500
106-003	GE06-LL M10x1	6	M 10 x 1 tap	11	12	LL	100	500
106-003-L	GE06-L M10x1	6	M 10 x 1 tap	14	14	L	50	500
106-003-L-ZYL	GE06-L M10x1	6	M 10 x 1 cyl	14	14	L	50	500
106-007-L	GE06-L M14x1,5	6	M 14 x 1,5 cyl	19	14	L	50	500
106-004	GE06-LL 1/8BSPT	6	R 1/8 BSP tap	11	12	LL	100	500
106-004-L	GE06-L 1/8BSPT	6	R 1/8 BSP tap	14	14	L	50	500
106-004-L-ZYL	GE06-L 1/8BSPT	6	R 1/8 BSP cyl	14	14	L	50	500
106-008-L	GE06-L 3/8BSP	6	R 3/8 BSP cyl	14	14	L	50	500
106-005	GE06-LL 1/4BSPT	6	R 1/4 BSP tap	11	12	LL	100	500
106-005-L	GE06-L 1/4BSPT	6	R 1/4 BSP tap	14	14	L	50	500
106-005-S	GE06-S 1/4BSP	6	R 1/4 BSP cyl	17	19	S	50	
106-005-L-NPT	GE06-L 1/4NPT	6	1/4 NPT	17	14	L	50	500
106-004-NPT	GE06-LL 1/8NPT	6	1/8 NPT	11	12	LL	100	500

COMPRESSION FITTINGS - STRAIGHT SCREW COUPLING

1012-005	GE06-LL 1/4-28UNF	6	1/4 - 28 UNF	11	12	LL	100	500
108-001	GE08-LL M6x1	8	M 6 x 1 tap	14	14	LL	50	500
108-002	GE08-LL M8x1	8	M 8 x 1 tap	14	14	LL	50	500
108-003	GE08-LL M10x1	8	M 10 x 1 tap	14	14	LL	50	500
108-008-L	GE08-L M14x1,5	8	M 14 x 1,5 cyl	19	14	L	50	250
108-004	GE08-LL 1/8 BSPT	8	R 1/8 BSP tap	14	14	LL	50	500
108-004-L	GE08-L 1/8BSPT	8	R 1/8 BSP tap	19	14	L	50	250
108-005	GE08-LL 1/4BSPT	8	R 1/4 BSP tap	19	14	LL	50	250
108-005-L	GE08-L 1/4BSPT	8	R 1/4 BSP tap	19	17	L	50	250
110-003-L	GE10-L M 10x1	10	M 10 x 1 cyl	17	19	L	50	500
110-004-L	GE10-L 1/8BSP	10	R 1/8 BSP cyl	17	19	L	50	500
110-005-L	GE10-L 1/4BSP	10	R 1/4 BSP cyl	19	19	L	50	250
110-008-L	GE10-L M14x1,5	10	M 14 x 1,5 cyl	19	19	L	50	500

Stainless steel 1.4401 / 316 / V4A

Item No.	Description	D	G	SW	SW1	Serie	Bag	Box
1012-001	GE04-LL M6x1	4	M 6 x 1 tap	9	10	LL	25	250
1012-002	GE04-LL M8x1	4	M 8 x 1 tap	9	10	LL	25	250
1012-003	GE04-LL M10x1	4	M 10 x 1 tap	11	10	LL	25	250
1012-004	GE04-LL R1/8BSPT	4	R 1/8 BSP tap	11	10	LL	25	250
106-001-VA	GE06-LL M6x1	6	M 6 x 1 tap	11	12	LL	25	500
106-002-VA	GE06-LL M8x1	6	M 8 x 1 tap	11	12	LL	25	500
106-003-VA	GE06-LL M10x1	6	M 10 x 1 tap	11	12	LL	25	500
106-003-L-VA	GE06-L M10x1zyl	6	M 10 x 1 cyl	14	14	L	25	250
106-004-VA	GE06-LL 1/8BSPT	6	R 1/8 BSP tap	11	12	LL	25	250
106-004-VA-L	GE06-L 1/8BSP	6	R 1/8 BSP cyl	14	14	L	25	250
106-005-VA-L	GE06-L 1/4BSPT	6	R 1/4 BSP tap	19	14	L	25	250
1012-006	GE06-LL /8NPT	6	1/8 NPT	11	12	LL	25	250
108-003-VA-L	GE08-L M10x1	8	M 10 x 1 cyl	17	17	L	25	250
108-004-VA	GE08-LL 1/8BSP	8	R 1/8 BSP cyl	14	14	LL	25	250
108-004-VA-L	GE08-L 1/8BSPT	8	R 1/8 BSP tap	14	17	L	25	250
108-005-VA-L	GE08-L 1/4BSPT	8	R 1/4 BSP tap	19	17	L	25	250
110-003-VA-L	GE10-L M10x1	10	M 10 x 1 cyl	17	19	L	25	250

Compression Fittings - Angle Screw Connectors 90°

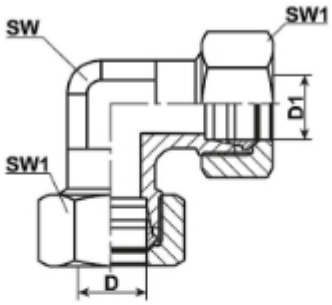

Steel zinc / steel zinc-nickel / Cr-VI free

Item No.	Description	D	D1	SW	SW1	Serie	Bag	Box
1015-100	W06-LL	6	6	9	12	LL	50	500
1015-101	W08-L	8	8	12	17	L	50	250
110-100-L	W10-L	10	10	14	19	L	50	250

COMPRESSION FITTINGS - EQUAL TEE CONNECTORS

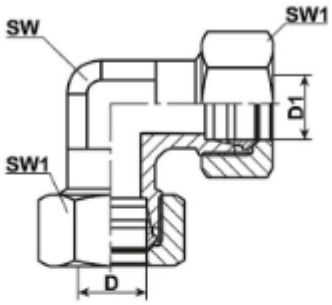

Steel zinc / steel zinc-nickel / Cr-VI free

Item No.	Description	D	D1	SW	SW1	Serie	Bag	Box
1015-100	W06-LL	6	6	9	12	LL	50	500
1015-101	W08-L	8	8	12	17	L	50	250
110-100-L	W10-L	10	10	14	19	L	50	250

Compression Fittings - Non Return Valves

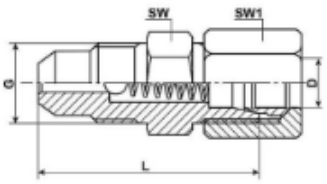

Steel zinc / steel zinc-nickel / Cr-VI free

Item No.	D	G	L	SW	SW1	Serie	Bag	Box
106-003-RVB	6	M 10 x 1	26,5	11	12	LL	100	500

Stainless steel 1.4401 / 316 / V4A

Item No.	D	G	L	SW	SW1	Serie	Bag	Box
1017-001	6	M 10 x 1	26,5	11	12	LL	100	500

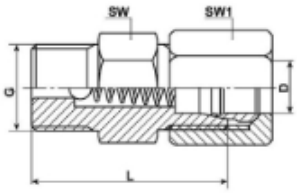

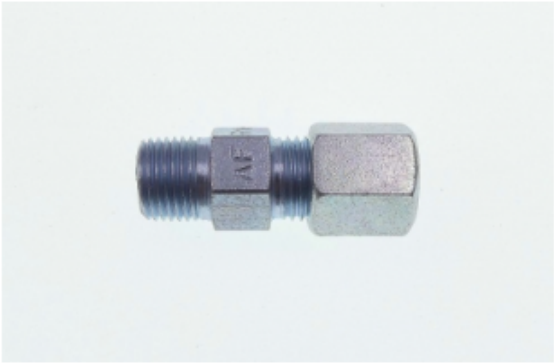

Steel zinc / steel zinc-nickel / Cr-VI free

Item No.	D	G	L	SW	SW1	Serie	Bag	Box
106-003-RVV	6	M 10x1 keg	23	11	12	LL	100	500
106-004-RVV	6	R 1/8 BSPT	20,5	11	12	LL	100	500

Stainless steel 1.4401 / 316 / V4A

Item No.	D	G	L	SW	SW1	Serie	Bag	Box
106-003-RVV-VA	6	M 10 x 1 tap		11	12	LL	25	500

COMPRESSION FITTINGS - NON RETURN VALVES

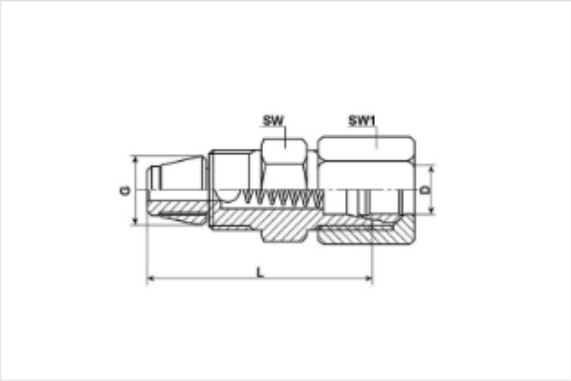

Steel zinc / steel zinc-nickel / Cr-VI free, black

Item No.	D	G	L	SW	SW1	Serie	Bag	box
106-003-RVL	6	M 10 x 1	27	11	12	LL	100	500

Stainless steel 1.4401 / 316 / V4A

Item No.	D	G	L	SW	SW1	Serie	Bag	Box
106-003-RVL-VA	6	M 10 x 1	27	11	12	LL	25	500

Non-return valve complete with coupling nut and cutting ring 24°

Compression Fittings - Bulkheads 24° Straight

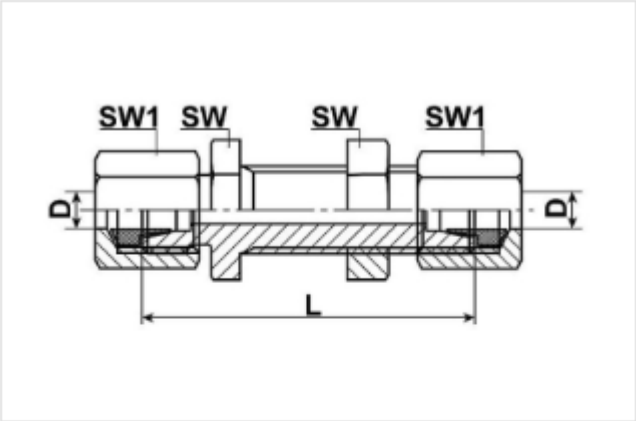

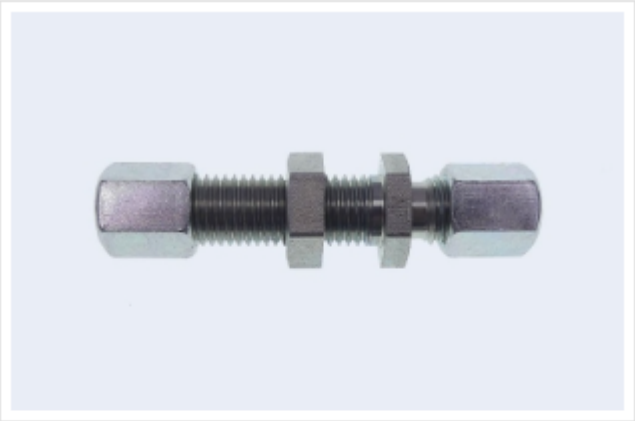

Steel zinc / steel zinc-nickel / Cr-VI free

Item No.	D	L	SW	SW1	Serie	Bag	Box
106-221-L	6	48	17	14	L	10	100
108-221-L	8	49	19	17	L	10	50
110-221-L	10	52	22	19	L	10	50

Stainless steel 1.4571 / 316ti

Item No.	D	L	SW	SW1	Serie	Bag	Box
106-221-VA-L	6	48	17	14	L	10	100
108-221-VA-L	8	49	19	17	L	10	50

COMPRESSION FITTINGS - BULKHEADS 24° STRAIGHT FEMALE THREAD

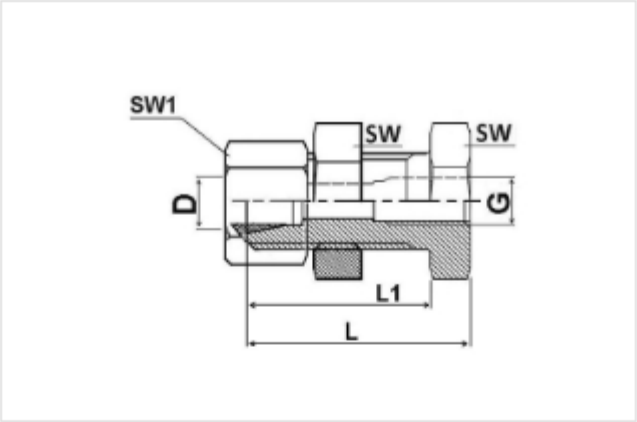

Steel zinc / steel zinc-nickel / Cr-VI free

Item No.	D	G	SW	SW1	L	L1	Serie	Bag	Box
106-241-L	6	M 6x1	17	14	28	23	L	10	250

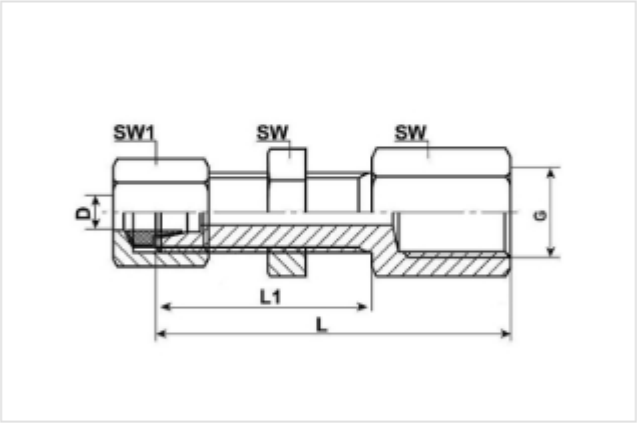

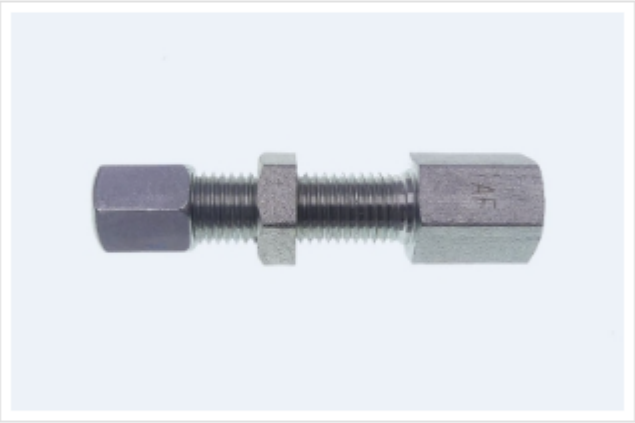

Steel zinc / steel zinc-nickel / Cr-VI free

Item No.	D	G	SW	SW1	L	L1	Serie	Bag	Box
106-243-L	6	M 10x1	17	14	60	40	L	10	250
1020-001	6	Rp 1/8 BSPP	17	14	54	34	L	10	250

Stainless steel 1.4404 / 316 / V4A

Item No.	D	G	SW	SW1	L	L1	Serie	Bag	Box
106-243-VA-L	6	M 10x1	17	14	60	40	L	10	250

Compression Fittings - Bulkheads 24° Elbow

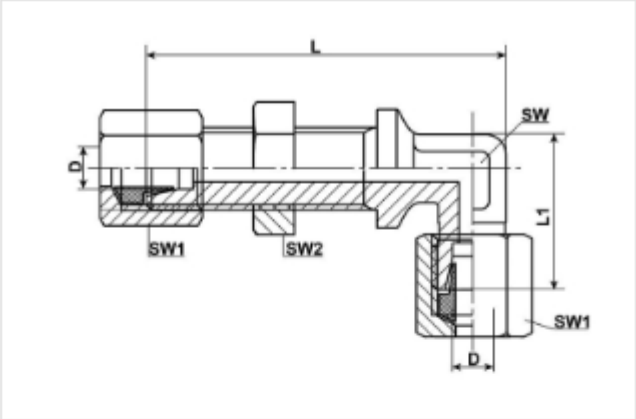

Steel zinc / steel zinc-nickel / Cr-VI free

Item No.	D	L	L1	SW	SW1	SW2	Serie	Bag	Box
106-231-L	6	48	19	12	14	17	L	10	100
108-231-L	8	57	26	12	17	19	L	10	50
110-231-L	10	60	29	19	19	22	L	10	50

Stainless steel 1.4571 / 316ti

Item No.	D	L	L1	SW	SW1	SW2	Serie	Bag	Box
106-231-VA-L	6	48	19	12	14	17	L	10	100
108-231-VA-L	8	57	26	12	17	19	L	10	50

Bulkhead fittings contribute to optimise all kind of central lube systems. Well choosen and placed anchor points and consequently shorter feet line lengths reduce repair costs caused by vibrations and other mechanical an physical impacts on the whole lubrication system.

Compression Fittings - Bulkheads 24° Elbow Female Thread

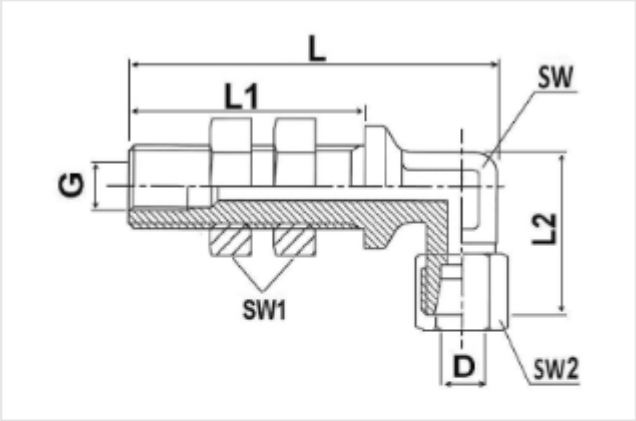

Steel, surface zinc-nickel / chrome-VI free

Item No.	D	G	L	L1	L2	SW	SW1	SW2	Serie	Bag	Box
1019-001	6	M 6 x 1	54	34	24	12	17	14	L	10	250

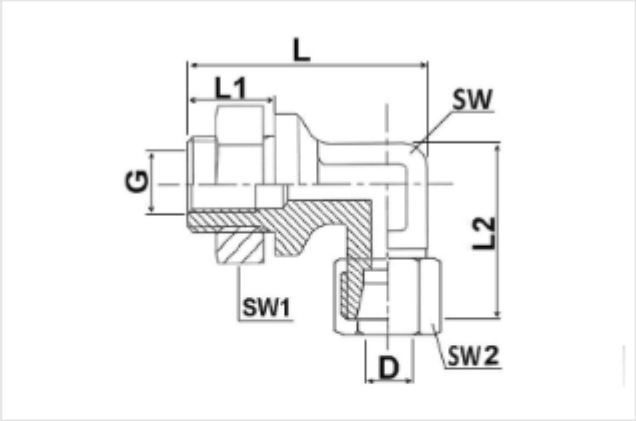

Steel, surface zinc-nickel / chrome-VI free

Item No.	D	G	L	L1	L2	SW	SW1	SW2	Serie	Bag	Box
1019-002	6	M 6 x 1	30	11	24	12	17	14	L	10	250

COMPRESSION FITTINGS - SWIVEL UNIONS 24° ELBOW

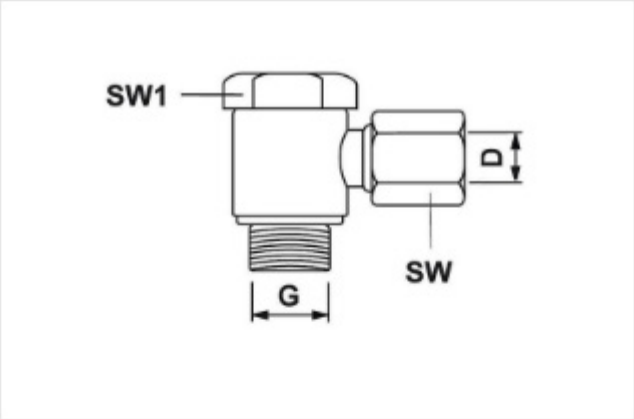

Steel zinc / steel zinc-nickel / Cr-VI free

Item No.	Description	D	G	SW	SW1	Serie	Bag	Box
1022-110	SWVE4-LLM10x1	4	10x1	10	14	LL	50	250
106-123	SWVE6-LLM10x1	6	10x1	12	14	LL	50	500
106-123-L	SWVE6-LM10x1	6	10x1	14	14	L	50	500
1022-111	SWVE4-LLG1/8	4	1/8 BSP	10	14	LL	50	250
106-124	SWVE6-LLG1/8	6	1/8 BSP	12	14	LL	50	500
106-124-L	SWVE6-LG1/8	6	1/8 BSP	14	14	L	50	500

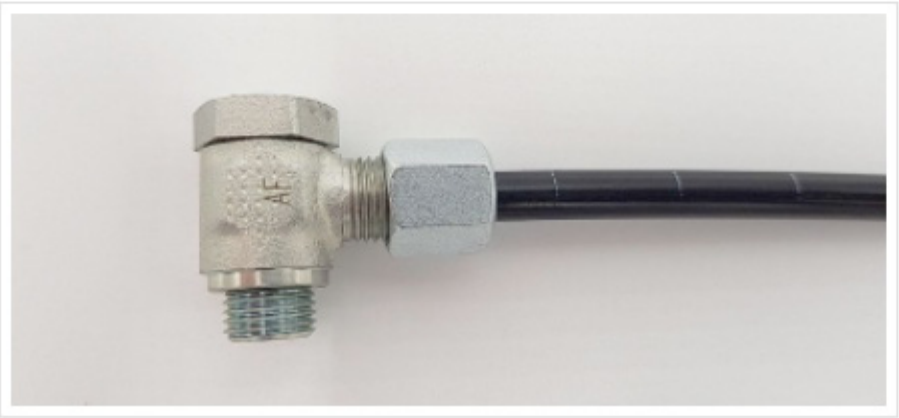

Compression Fittings - Coupling nuts 24°

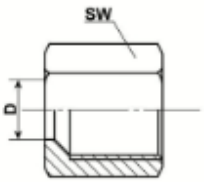

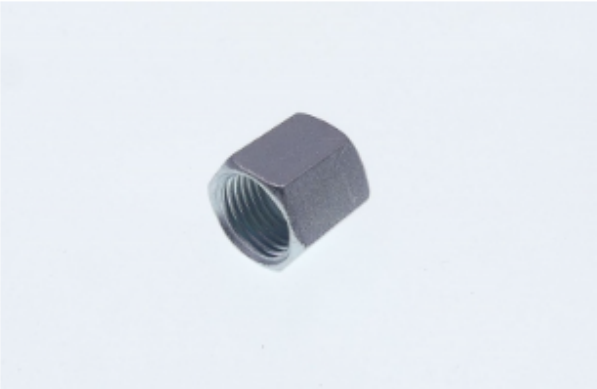

Steel zinc / steel zinc-nickel / Cr-VI free

Item No.	D	SW	Serie	Bag	Box
104-200	4	10	LL	100	1000
106-200	6	12	LL	100	4000
106-200-L	6	14	L	100	2500
106-200-S	6	17	S	50	2500
108-200	8	14	LL	100	2500
108-200-L	8	17	L	100	1500
110-200	10	17	LL	100	1000
110-200-L	10	19	L	100	1000

Steel zinc / steel zinc-nickel / Cr-VI free, black

Item No.	D	SW	Serie	Bag	Box
106-200-SW	6	12	LL	100	4000

Stainless steel 1.4571 / 316ti

Item No.	D	SW	Serie	Bag	Box
1023-001	4	10	LL	50	5000
106-200-VA	6	12	LL	50	1000
106-200-L-VA	6	14	L	50	2500
108-200-VA	8	14	LL	50	500

COMPRESSION FITTINGS - CUTTING RINGS 24°

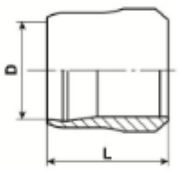

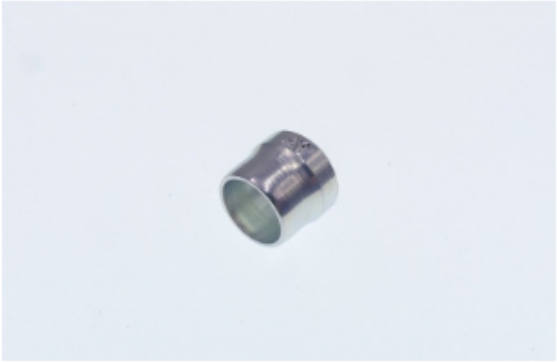

Steel zinc / steel zinc-nickel / Cr-VI free

Item No.	D	L	Serie	Bag	Box
104-210	4	6	LL	100	1000
106-210	6	7	LL	100	2000
106-210-L	6	9,45	L / S	100	2000
108-210	8	7,35	LL	100	1000
108-210-L	8	9,48	L / S	100	1000
110-210	10	7,02	LL	100	1000
110-210-L	10	9,5	L / S	100	1000

Stainless steel 1.4571 / 316ti

Item No.	D	L	Series	Bag	Box
1024-001	4	6	LL	50	1000
106-210-VA	6	7	LL	50	1000
106-210-L-VA	6	9,45	L / S	50	1000
108-210-VA	8	7,35	LL	50	1000
108-210-L-VA	8	9,48	L / S	50	1000
110-210-L-VA	10	9,5	L / S	50	1000

Brass

Item No.	D	L	Serie	Bag	Box
106-210-MS	6	7	LL	100	2000

Tapered cutting-rings 24° for solderless tube and pipe connections according to DIN 2353 and DIN 3861 / ISO 8434-1 for all manual and automatique lubrication solutions.

Compression Fittings - T-banjos 24° compression fittings

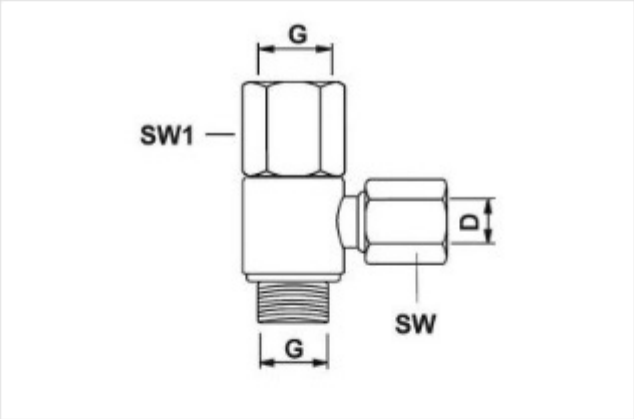

Steel zinc / steel zinc-nickel / Cr-VI free

Item No.	Description	D	G	SW	SW1	Serie	Bag	Box
1025-103	SWVE6-LLM10x1	6	10 x 1	12	14	LL	50	200
1025-104	SWVE6-LLG1/8	6	1/8 BSP	12	14	LL	50	200

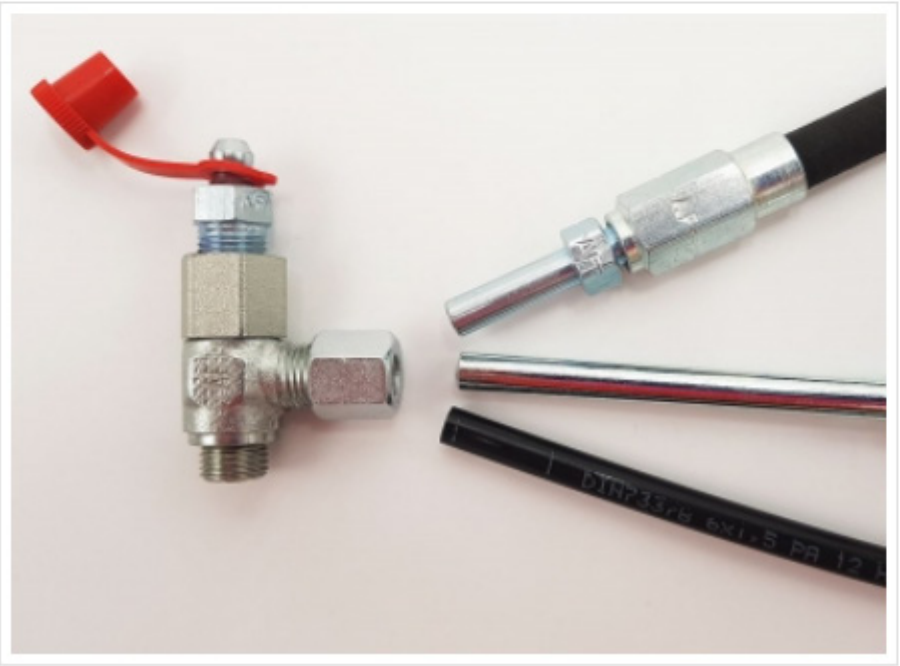

PUSH LOCKS - PUSH TO CONNECT FITTINGS - STRAIGHT CONNECTORS

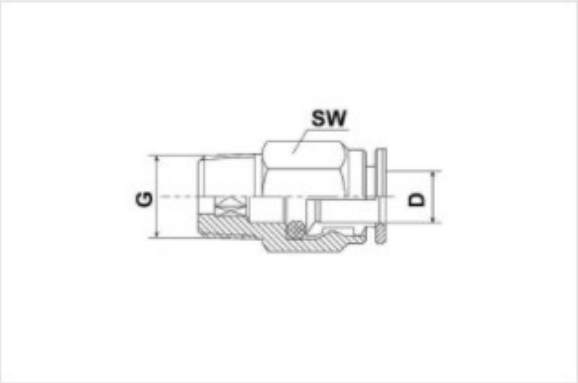

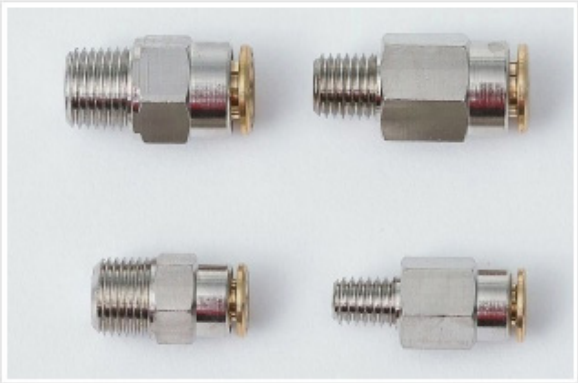

Plated brass, metric screw thread

Item No.	G	D	SW	Bag	Box
104-051	M 6 x 1 tap	4	10	50	500
104-052	M 8 x 1 tap	4	10	50	500
104-053	M 10 x 1 tap	4	11	50	500
106-051	M 6 x 1 tap	6	12	50	500
106-052	M 8 x 1 tap	6	12	50	500
106-053	M 10 x 1 tap	6	12	50	500

Plated brass, inch screw thread

Item No.	G	D	SW	Bag	Box
104-054	R 1/8 BSP tap	4	10	50	500
104-054-NPT	1/8 NPT	4	11	50	500
104-055-UNF	1/4 - 28 UNF	4	11	50	500
106-054	R 1/8 BSP tap	6	12	50	500
106-054-NPT	1/8 NPT	6	12	50	500
106-055-UNF	1/4 - 28 UNF	6	12	50	500
2010-101	1/4 - 28 UNF	1/4"	12	50	500
2010-102	1/8 NPT	1/4"	12	50	500

Push Locks - Push to Connect Fittings - 90° Elbow Connectors

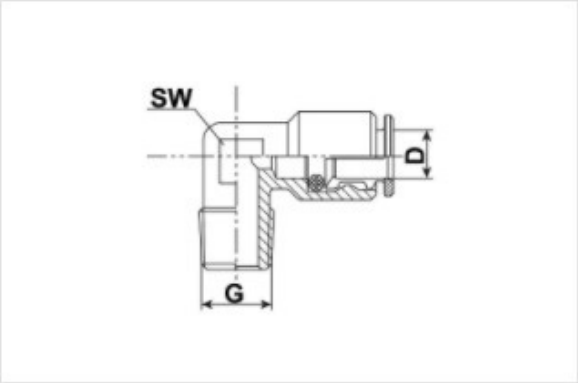

Plated brass, metric screw thread

Item No.	G	D	SW	Bag	Box
104-151	M6 x 1 tap	4	10	50	500
104-152	M8 x 1 tap	4	10	50	500
104-153	M10 x 1 tap	4	10	50	500
106-151	M6 x 1 tap	6	10	50	500
106-152	M8 x 1 tap	6	10	50	500
106-153	M10 x 1 tap	6	10	50	500

Plated brass, inch screw thread

Item No.	G	D	SW	Bag	Box
104-154	R 1/8 BSP tap	4	10	50	500
104-154-NPT	1/8 NPT	4	10	50	500
104-155-UNF	1/4 - 28 UNF	4	10	50	500
106-154	R 1/8 BSP tap	6	10	50	500
106-154-NPT	1/8 NPT	6	10	50	500
106-155-UNF	1/4 - 28 UNF	6	10	50	500
2011-101	1/4 - 28 UNF	1/4"	10	50	500
2011-102	1/8 NPT	1/4"	10	50	500

PUSH LOCKS - PUSH TO CONNECT FITTINGS - 90° SWIVEL CONNECTOR

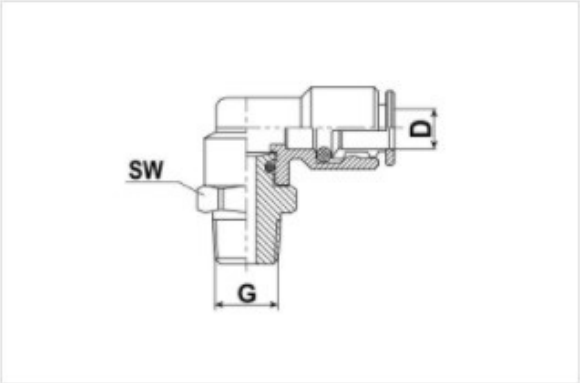

Plated brass, metric screw thread

Item No.	G	D	SW	Bag	Box
104-111	M6 x 1 tap	4	13	50	500
104-112	M8 x 1 tap	4	13	50	500
104-113	M10 x 1 tap	4	13	50	500
106-111	M6 x 1 tap	6	13	50	500
106-112	M8 x 1 tap	6	13	50	500
106-113	M10 x 1 tap	6	13	50	500

Plated brass, inch screw thread

Item No.	G	D	SW	Bag	Box
104-114	R 1/8 BSP tap	4	13	50	500
104-114-NPT	1/8 NPT	4	13	50	500
104-115-UNF	1/4 - 28 UNF	4	13	50	500
106-114	R 1/8 BSP tap	6	13	50	500
106-114-NPT	1/8 NPT	6	13	50	500
106-115-UNF	1/4 - 28 UNF	6	13	50	500
2012-101	1/4 - 28 UNF	1/4"	13	50	500
2012-102	1/8 NPT	1/4"	13	50	500

Push Locks - Push to Connect Fittings - Quick connectors

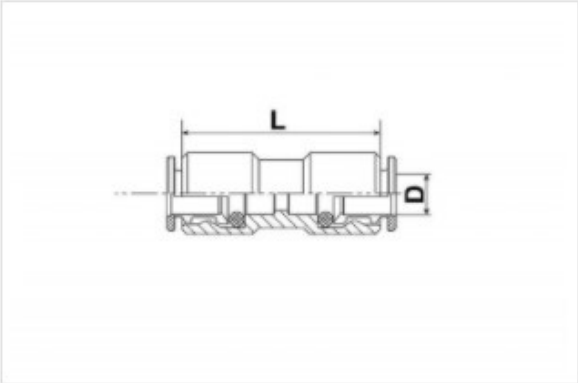

Plated brass, metric screw thread

Item No.	D	L	Bag	Box
104-110	4	26	50	500
106-110	6	29,5	50	500

Plated brass, inch screw thread

Item No.	D	L	Bag	Box
2013-100	1/4"	30	50	500

Threaded Hose Sleeves For Assembling High Pressure Hose

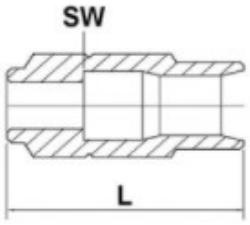

Item No.	Material	L	SW	Bag	Box
100-050	steel, surface chrome-VI free, galvanised	28	12	100	500
100-050-SW	steel, surface chrome-VI free, black Fn galvanised	28	12	100	500
100-050-VA	stainless steel 1.4401 / 316 / V4A	28	12	25	500

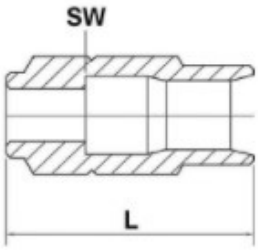

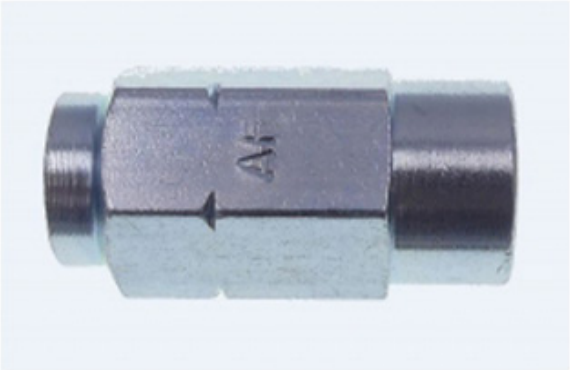

Item No.	Material	L	SW	Bag	Box
100-060	steel, surface chrome-VI free, galvanised	35,8	17	50	500
100-060-VA	stainless steel 1.4401 / 316 / V4A	35,8	17	25	500

Threaded Hose Sleeves For Assembling High Pressure Hose

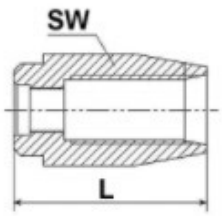

Item No.	Material	L	SW	Bag	Box
100-050-1	steel, surface chrome-VI free, galvanised	26	1/2"	100	500
3010-001	stainless steel 1.4401 / 316 / V4A	26	1/2"	25	500

TUBE SOCKETS - TUBE STUDS - HOSE STUDS - MALE STAND PIPES - STRAIGHT

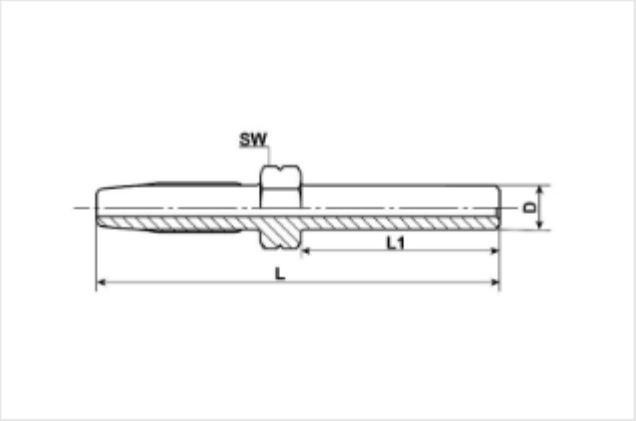

Steel zinc / steel zinc-nickel / CVIF

Item No.	Hose Ø	D	L	L1	SW	Bag	Box
100-054-4	4,1 x 8,75	4	51	20	10	50	500
100-054	4,1 x 8,75	6	51	20	10	100	500
100-055	4,1 x 8,75	6	55	24	10	100	500
100-051	4,1 x 8,75	6	61	30	10	100	500
100-091	4,1 x 8,75	6	96,5	65,5	10	100	500
100-051-8	4,1 x 8,75	8	61	30	10	50	500
3510-110	4,1 x 8,75	1/4"	61	30	11	100	500
3510-113	4,1 x 8,75	3/16"	51	20	10	100	500
100-064	6,35 x 11,3	6	65,5	22	12	50	500
100-074	6,35 x 11,3	8	65,5	22	12	50	500
100-081	6,35 x 11,3	10	73,5	30	12	50	500

Stainless steel 1.4401 / 316 / V4A

Item No.	Hose Ø	D	L	L1	SW	Bag	Box
100-051-VA	4,1 x 8,75	6	61	30	10	25	500
100-064-VA	6,35 x 11,3	6	65,5	22	12	25	250
100-074-VA	6,35 x 11,3	8	65,5	22	12	25	250
100-081-VA	6,35 x 11,3	10	73,5	30	12	25	500

Tube Sockets - Tube Studs - Hose studs - Male Stand Pipes - Straight

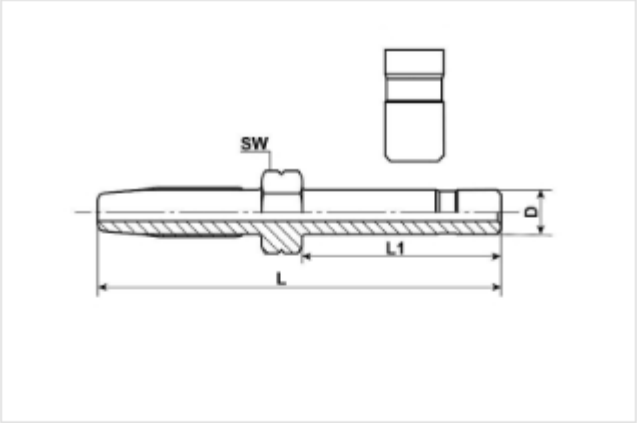

Steel zinc / steel zinc-nickel / CrVIF

Item No.	Hose Ø	D	L	L1	SW	Bag	Box
100-054-NUT	4,1 x 8,75	6	51	20	10	100	500
100-051-NUT	4,1 x 8,75	6	61	30	10	100	500
3510-111	4,1 x 8,75	1/4"	61	30	11	100	500
100-064-NUT	6,35 x 11,3	6	65,5	22	12	50	500
3510-112	1/8" x 5/16"	1/4"	2,09"	1,18"	7/16"	100	500

Stainless steel 1.4401 / 316 / V4A

Item No.	Hose Ø	D	L	L1	SW	Bag	Box
3510-142	4,1 x 8,75	6	51	20	10	25	500
3510-141	1/8" x 5/16"	1/4"	53	21,5	7/16"	25	500

Steel zinc / steel zinc-nickel / CrVIF, black

Item No.	Hose Ø	D	L	L1	SW	Bag	Box
100-054-NUT-SW	4,1 x 8,75	6	52,5	21,5	10	100	500
100-051-NUT-SW	4,1 x 8,75	6	61	30	10	100	500

TUBE SOCKETS - TUBE STUDS - HOSE STUDS - MALE STAND PIPES - STRAIGHT

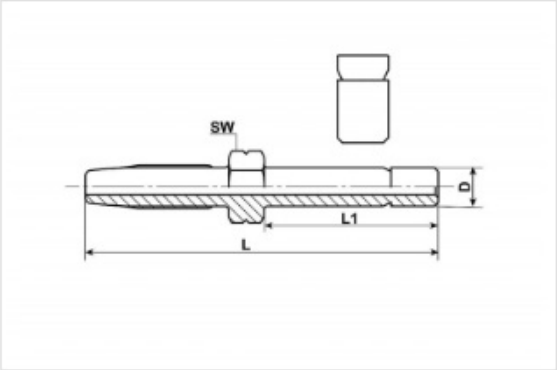

Steel zinc / steel zinc-nickel / CrVIF

Item No.	Hose Ø	D	L	L1	SW	Bag	Box
100-055-NUT-V	4,1 x 8,75	6	55	24	10	100	500

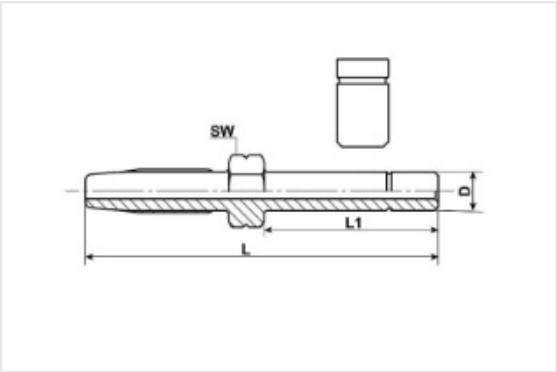

Steel zinc / steel zinc-nickel / CrVIF

Item No.	Hose Ø	D	L	L1	SW	Bag	Box
3510-115	4,1 x 8,75	6	61	30	10	100	500

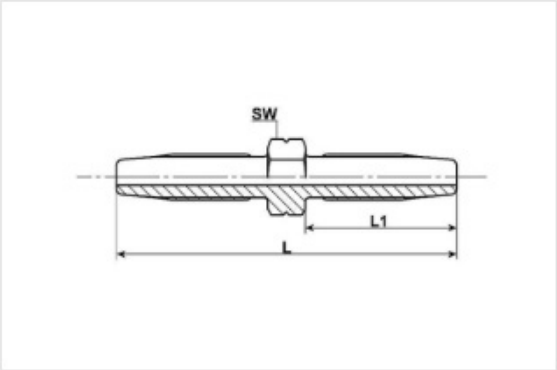

Steel zinc / steel zinc-nickel / CrVIF

Item No.	Hose Ø	L	L1	SW	Bag	Box
100-061	4,1 x 8,75	56	25	10	100	500

Tube Sockets - Tube Studs - Hose studs - Male Stand Pipes - Straight

Note:
Please use the swivel function of the hose end – NPT swivel exclusively for mounting.
It is not suitable for permanent use.

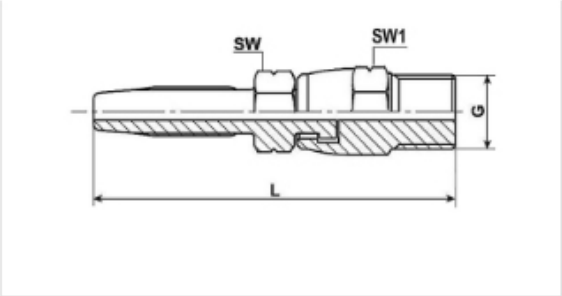

Steel zinc / steel zinc-nickel / CrVIF

Item No.	Hose Ø	L	G	SW	SW1	Bag	Box
100-051-1	1/8" x 5/16"	56	1/8 NPT	7/16"	1/2"	100	500
3510-140	1/8" x 5/16"	57	1/8 BSPT	7/16"	1/2"	100	500

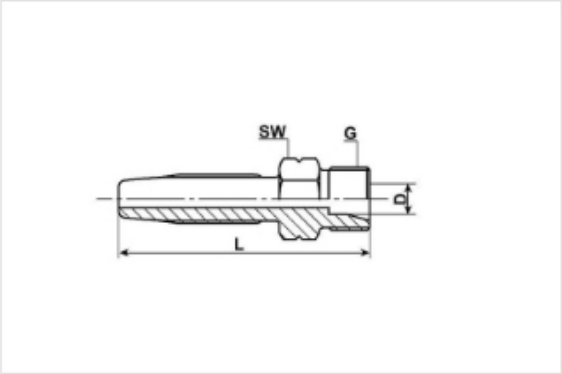

Steel zinc / steel zinc-nickel / CrVIF

Item No.	Hose Ø	G	D	L	SW	Bag	Box
3510-101	4,1 x 8,75	M 10x1	6 LL	39	11	100	500

Note:
Please use the swivel function of the rotatable fitting socket exclusively for mounting.
It is not suitable for permanent use.

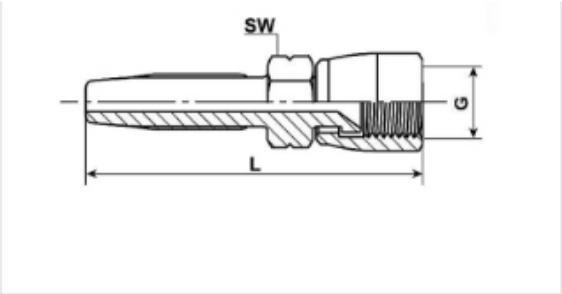

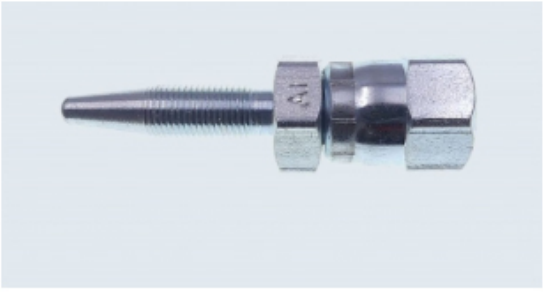

Steel zinc / steel zinc-nickel / CrVIF

Item No.	Hose Ø	G	L	SW	SW1	Bag	Box
3510-114	4,1 x 8,75	JIC37° 7/16	27,5	14	14	50	500

TUBE SOCKETS - TUBE STUDS - HOSE STUDS - MALE STAND PIPES - STRAIGHT

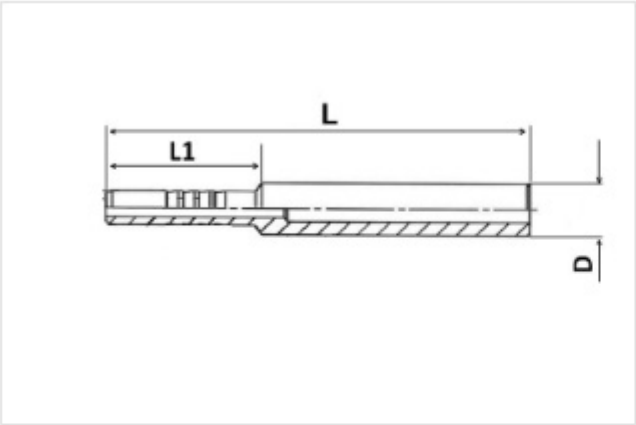

Steel zinc / steel zinc-nickel / CrVIF

Item No.	Hose Ø	D	L	L1	Bag	Box
100-051-press	4,1 x 8,75	6	48,5	16,5	100	1000

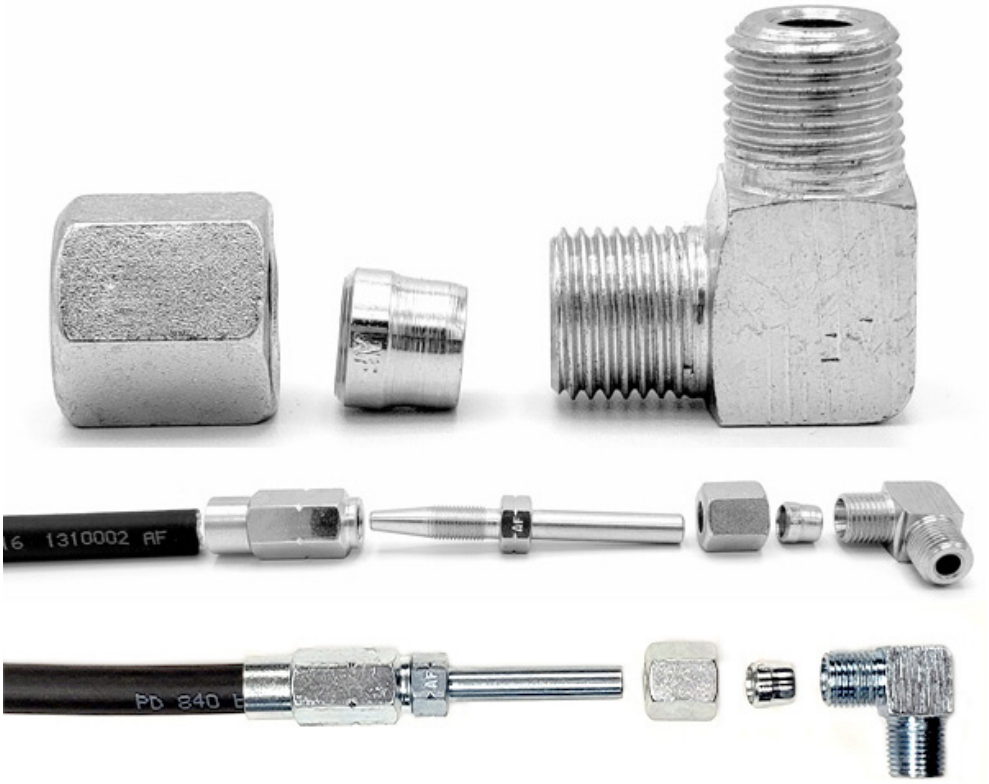

Tube Sockets - Tube Studs - Hose studs - 90°

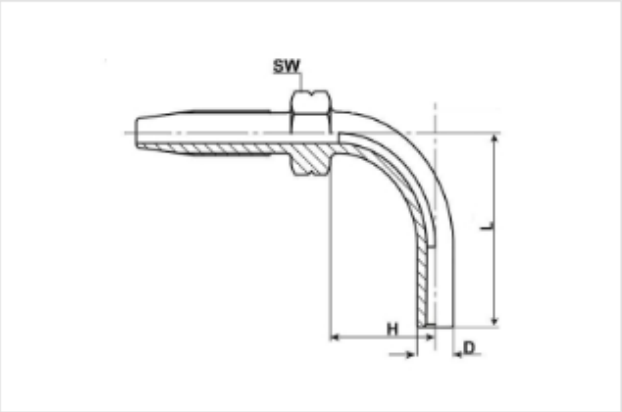

Steel zinc / steel zinc-nickel / CrVIF

Item No.	Hose Ø	D	H	L	SW	Bag	Box
100-059-4	4,1 x 8,75	4	14	30	10	50	500
100-052	4,1 x 8,75	6	13	21	10	100	500
100-059	4,1 x 8,75	6	14	33	10	100	500
100-062	4,1 x 8,75	6	17	28	10	100	500
100-053	4,1 x 8,75	6	28	37	10	100	500
100-056	4,1 x 8,75	6	28	53	10	100	500
3511-110	4,1 x 8,75	1/4"	28	37	11	100	500
3511-113	4,1 x 8,75	3/16"	14	32	10	100	500
100-063	6,35 x 11,3	6	22	45	12	50	500
100-073	6,35 x 11,3	8	23	36	12	50	500
100-076	6,35 x 11,3	8	23	55	12	50	500
100-083	6,35 x 11,3	10	23	36	12	50	500

Stainless steel 1.4401 / 316 / V4A

Item No.	Hose Ø	D	H	L	SW	Bag	Box
100-053-VA	4,1 x 8,75	6	28	37	10	25	500
3511-210	6,35 x 11,3	6	22	45	12	25	500
100-073-VA	6,35 x 11,3	8	23	36	12	25	250
3511-212	6,35 x 11,3	10	23	36	12	25	500

TUBE SOCKETS - TUBE STUDS - HOSE STUDS - 90°

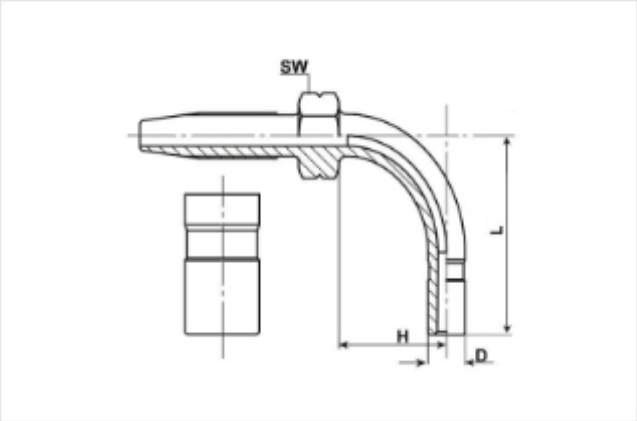

Steel zinc / steel zinc-nickel / CrVIF

Item No.	Hose Ø	D	H	L	SW	Bag	Box
100-053-NUT	4,1 x 8,75	6	25	37	10	100	1000
100-056-NUT	4,1 x 8,75	6	28	53	10	100	500
3511-111	4,1 x 8,75	1/4"	28	37	11	100	500
3511-112	1/8" x 5/16"	1/4"	27 mm / 1,06"	35 mm / 1,38"	11 mm / 7/16"	100	500

Steel zinc / steel zinc-nickel / CrVIF, black

Item No.	Hose Ø	D	H	L	SW	Bag	Box
3511-116	4,1 x 8,75	6	17	28	10	100	500
100-053-NUT-SW	4,1 x 8,75	6	28	37	10	100	500
100-056-NUT-SW	4,1 x 8,75	6	28	53	10	100	500

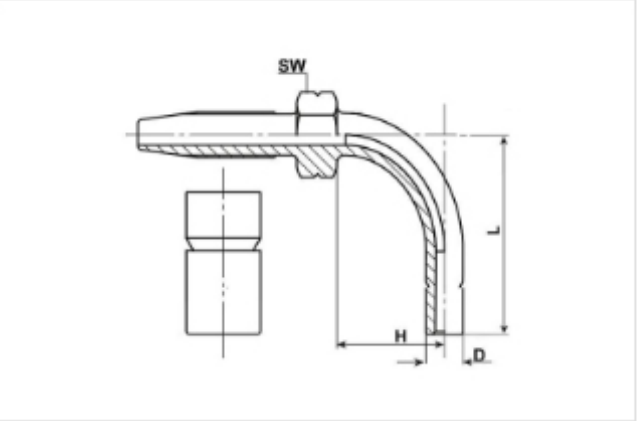

Steel zinc / steel zinc-nickel / CrVIF

Item No.	Hose Ø	D	H	L	SW	Bag	Box
100-059-NUT-V	4,1 x 8,75	6	14	33	10	25	500

Tube Sockets - Tube Studs - Hose studs - 90°

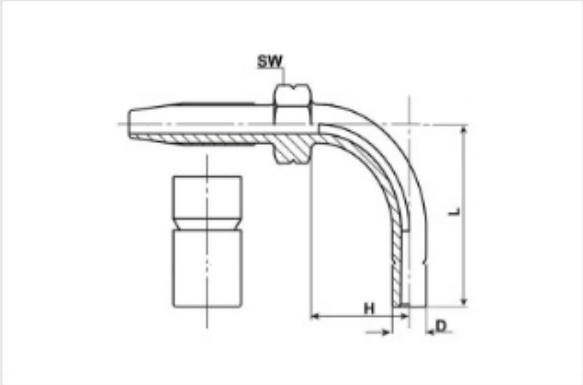

Steel zinc / steel zinc-nickel / CrVIF

Item No.	Hose Ø	D	H	L	SW	Bag	Box
100-059-NUT-V	4,1 x 8,75	6	14	33	10	25	500

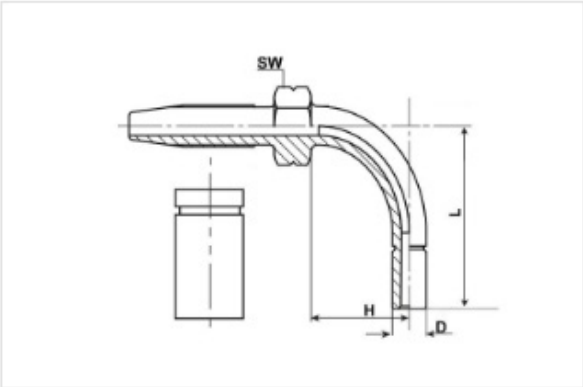

Steel zinc / steel zinc-nickel / CrVIF

Item No.	Hose Ø	D	H	L	SW	Bag	Box
3511-115	4,1 x 8,75	6	17	28	10	100	500

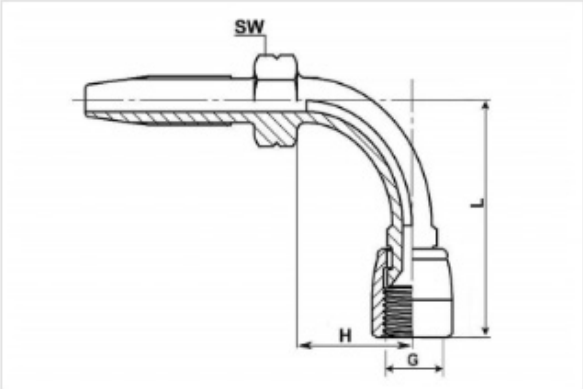

Steel zinc / steel zinc-nickel / CrVIF

Item No.	Schlauch Ø	G	H	L	SW	SW1	Bag	Box
3511-114	4,1 x 8,75 4,1 x 8,75	JIC37°7/16	20,7	25,7	14	14	50	500

TUBE SOCKETS - TUBE STUDS - HOSE STUDS - 45°

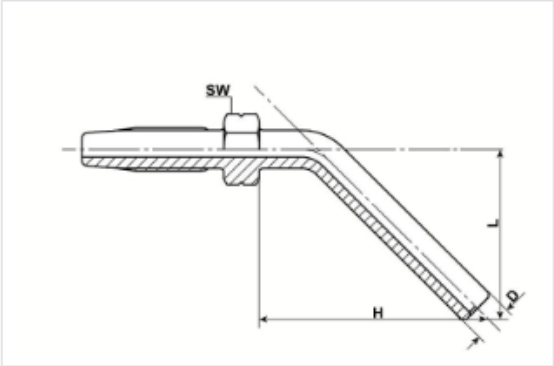

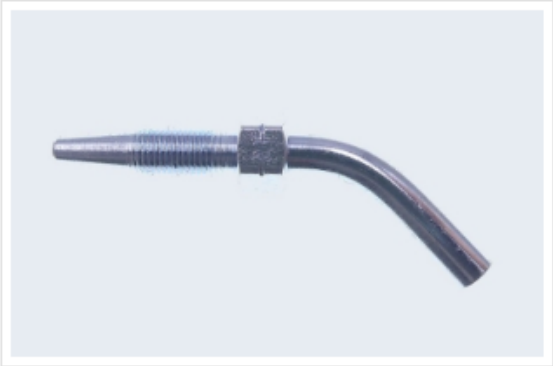

Steel zinc / steel zinc-nickel / CrVIF

Item No.	Hose Ø	D	H	L	SW	Bag	Box
100-057	4,1 x 8,75	6	24	15	10	100	500
100-058	4,1 x 8,75	6	35	25	10	100	500
3512-110	4,1 x 8,78	1/4"	35	25	11	100	1000
100-068	6,35 x 11,3	6	35	25	12	50	500
100-078	6,35 x 11,3	8	35	25	12	50	500

Stainless steel 1.4401 / 316 / V4A

Item No.	Hose Ø	D	H	L	SW	Bag	Box
100-058-VA	4,1 x 8,75	6	35	25	10	25	500

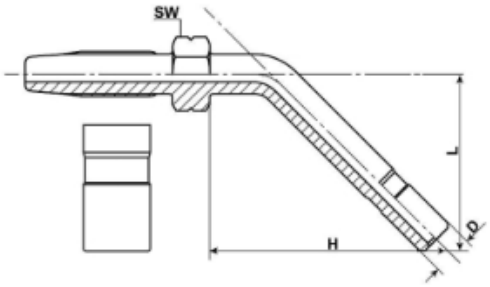

Steel zinc / steel zinc-nickel / CrVIF

Item No.	Hose Ø	D	H	L	SW	Bag	Box
100-057-NUT	4,1 x 8,75	6	24	15	10	100	500
100-058-NUT	4,1 x 8,75	6	35	25	10	100	500
3512-111	4,1 x 8,75	1/4"	35	25	11	100	1000

Steel zinc / steel zinc-nickel / CrVIF, black

Item No.	Hose Ø	D	H	L	SW	Bag	Box
100-058-NUT-SW	4,1 x 8,75	6	35	25	10	100	500

ADAPTERS - EXTENSIONS - REDUCERS

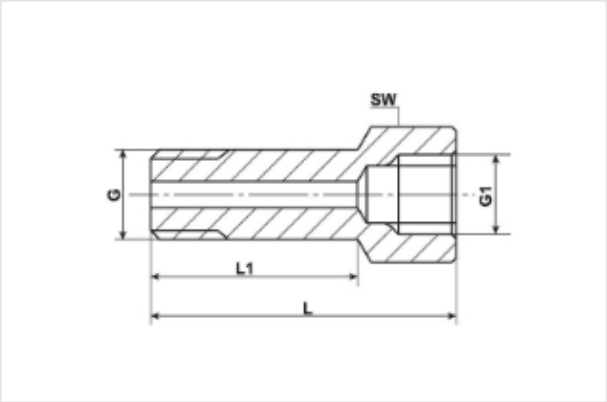

Adapter - extention piece with metric and BSP thread

Steel zinc / steel zinc-nickel / CrVI free

Item N°	G	G1	L	L1	SW	Bag	Box
100-125	M 6 x 1 tap	M 6 x 1	57,5	7,5	9	50	500
2510-102	M 6 x 1 tap	M 6 x 1	20	7,5	9	50	500
100-120	M 6 x 1 tap	M 8 x 1	19	7	11	50	500
2510-103	M 6 x 1 tap	M 10 x 1	23	10	13	50	500
2510-104	M 6 x 1 tap	Rp 1/8 BSP	23	10	13	50	500
100-130	M 8 x 1 tap	M 8 x 1	18	8	11	50	500
100-130-1	M 8 x 1,25 tap	M 8 x 1,25	20	7	11	50	500
100-132	M 8 x 1 tap	M 8 x 1	32	22	11	50	500
100-132-1	M 8 x 1,25 tap	M 8 x 1,25	32	22	11	50	500
100-135	M 8 x 1 tap	M 8 x 1	62,5	52,5	11	50	500
100-137	M 8 x 1 tap	M 10 x 1	23	12	13	50	500
100-170	M 8 x 1 tap	Rp 1/8 BSP	23	12	13	50	500
100-169	M 8 x 1 tap	Rp 1/4 BSP	22	8	17	50	500
100-140	M 10 x 1 tap	M 8 x 1	18	8	11	50	500
100-142	M 10 x 1 tap	M 10 x 1	18	7	13	50	500
100-141	M 10 x 1 tap	M 10x1	23	12	13	50	500
2510-211	M 10 x 1 ,5 tap	M 10x1	23	12	13	50	500
100-145	M 10 x 1 tap	M 10x1	35	24	13	50	500
100-143	M 10 x 1 tap	M 10x1	40	29	13	50	500

Adapters - Extensions - Reducers

2510-211	M 10 x 1 ,5 tap	M 10x1	23	12	13	50	500
100-145	M 10 x 1 tap	M 10x1	35	24	13	50	500
100-143	M 10 x 1 tap	M 10x1	40	29	13	50	500
2510-105	M 10 x 1 tap	M 10x1	40	9	14	50	500
100-146	M 10 x 1 tap	M 10x1	50	39	13	50	500
100-171	M 10 x 1 tap	Rp 1/4 BSP	22	8	17	50	500
100-151	R 1/8 BSP tap	M 10x1	18	7	13	50	500
100-152	R 1/8 BSP tap	Rp 1/8 BSP	18	11	13	50	500
100-155	R 1/8 BSP tap	M 8x1	18	7	13	50	500
2510-106	M 10 x 1 tap	Rp 1/8 BSP	18	7	13	50	500
100-148	R 1/8 BSP tap	Rp 1/8 BSP	23	12	13	50	500
100-156	R 1/8 BSP tap	Rp 1/8 BSP	30	18	13	50	500
100-149	R 1/8 BSP tap	Rp 1/8 BSP	35	23	13	50	500
100-157	R 1/8 BSP tap	Rp 1/8 BSP	41	29	13	50	500
100-154	R 1/8 BSP tap	Rp 1/8 BSP	45	33	13	50	500
100-153	R 1/8 BSP tap	Rp 1/8 BSP	50	38	13	50	500
100-144	R 1/4 BSP tap	M 10x1	20	9	17	50	500
100-147	R 1/4 BSP tap	Rp 1/8 BSP	20	9	17	50	500
100-162	R 1/8 BSP tap	Rp 1/4 BSP	22	8	17	50	500
100-160	R 1/4 BSP tap	Rp 3/8 BSP	27	11	22	50	500
100-161	R 1/4 BSP tap	Rp 1/4 BSP	25	9	19	50	500
2510-210	R 1/4 BSP tap	Rp 1/4 BSP	50	36	17	50	250
2510-209	R 1/4 BSP tap	Rp 1/4 BSP	65	51	17	50	250
100-186	R 1/4 BSP tap	Rp 1/4 BSP	85	71	17	50	250
100-187	R 1/4 BSP tap	Rp 1/4 BSP	104	90	17	50	250

ADAPTERS - EXTENSIONS - REDUCERS

Stainless steel 1.4401 / 316 / V4A

Item N°	G	G1	L	L1	SW	Bag	Box
2510-207	M 6 x 1 tap	Rp 1/8 BSP	23	12	13	25	500
2510-208	M 8 x 1 tap	Rp 1/8 BSP	23	10	13	25	500
2510-201	M 10 x 1 tap	M 10 x 1	18	7	13	25	500
100-141-VA	M 10 x 1 tap	M 10 x 1	23	12	13	25	500
2510-202	M 10 x 1 tap	M 10 x 1	35	24	13	25	500
2510-203	M 10 x 1 tap	M 10 x 1	50	39	13	25	500
2510-204	R 1/8 BSP tap	Rp 1/8 BSP	18	7	11	25	250
100-148-VA	R 1/8 BSP tap	Rp 1/8 BSP	23	12	13	25	500
2510-205	R 1/8 BSP tap	Rp 1/8 BSP	35	23	13	25	500
2510-206	R 1/8 BSP tap	Rp 1/8 BSP	50	38	13	25	250

Adapter - extention piece with NPT / UNF thread

Steel zinc / steel zinc-nickel / CrVI free

Item N°	G	G1	L	L1	SW	Bag	Box
100-182	1/8 NPT	1/8 NPT	20	9	1/2	50	500
100-183	1/8 NPT	1/8 NPT	30	18	1/2	50	500
2510-101	1/8 NPT	1/8 NPT	48	36	9/16	50	500
100-167	1/4-28 UNF	Rp 1/8 BSP	23	12	1/2	50	500

Please note:
It is also possible to connect a lubrication line directly to this adapter, extension piece.

Adapters - Extensions - Reducers - 45°

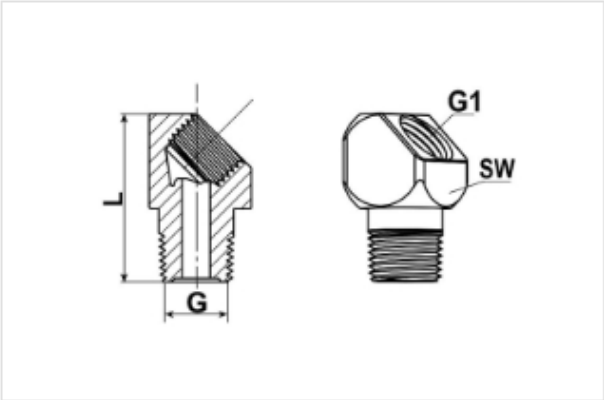

Attention:
Please check after assembly the fitting (male thread) into the angle adapter 90° (female thread), that the passage / flow is not closed.

Steel zinc / steel zinc-nickel / CrVI free

Item No.	G	G1	L	SW	Bag	Box
100-821	M 6 x 1 tap	M 8x1	23	13	50	500
100-822	M 8 x 1 tap	M 8x1	23	13	50	500
100-823	M 10 x 1 tap	M 8x1	23	13	50	500
100-833	M 10 x 1 tap	M 10x1	23	13	50	500
5010-102	M 6 x 1 tap	Rp 1/8 BSP	23	13	50	500
100-844	R 1/8 BSP tap	Rp 1/8 BSP	23	13	50	500
100-855	R 1/4 BSP tap	RP 1/4 BSP	33	17	50	500
5010-101	1/8 NPT tap	1/8 NPT	23	9/16	50	500

Stainless steel 1.4401 / 316 / V4A

Item No.	G	G1	L	SW	Bag	Box
5010-201	M 10 x 1 tap	M 10x1	23	13	25	500
5010-202	R 1/8 BSPT tap	Rp 1/8 BSP	23	13	25	500

ADAPTERS - EXTENSIONS - REDUCERS - ELBOW 90°

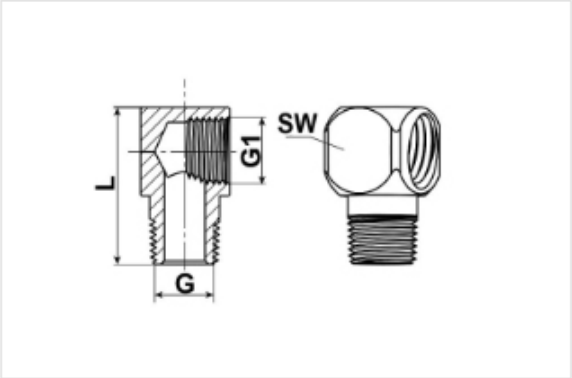

Steel zinc / steel zinc-nickel / CrVI free

. Item No.	G	G1	L	SW	Bag	Box
100-711	M 6 x 1 tap	M 6x1	23	12	50	500
100-721	M 6 x 1 tap	M 8x1	23	12	50	500
100-722	M 8 x 1 tap	M 8x1	23	12	50	500
100-722-1	M 8 x 1,25 tap	M 8x1,25	23	12	50	500
100-723	M 10 x 1 tap	M 8x1	23	12	50	500
100-724	R 1/8 BSP tap	M 8x1	23	12	50	500
5011-105	M 6 x 1 tap	M 10x1	23	13	50	500
100-732	M 8 x 1 tap	M 10x1	23	13	50	500
100-733	M 10 x 1 tap	M 10x1	23	13	50	500
5011-106	M 10 x 1 tap	M 10x1	29	13	50	500
100-733-10x1,5	M 10 x 1,5 tap	M 10x1	23	13	50	500
100-744	R 1/8 BSP tap	Rp 1/8 - BSP	23	13	50	500
100-755	R 1/4 BSP tap	RP 1/4 BSP	23	17	50	500
5011-101	1/8 NPT	1/8 NPT	23	9/16"	50	500
5011-102	1/8 NPT	1/8 NPT	38	9/16"	50	500
5011-103	M 6 x 1 tap	1/8 NPT	23	9/16"	50	500
5011-104	1/4-28 UNF	1/8 BSP	23	13	50	500

Stainless steel 1.4401 / 316 / V4A

Item No.	G	G1	L	SW	Bag	Box
5011-201	M 10 x 1 tap	M 10x1	23	13	25	500
5011-202	R 1/8 BSPT tap	RP 1/8 BSP	23	13	25	500

Attention:

Please check after assembly the fitting (male thread) into the angle adapter 90° (female thread), that the passage / flow is not closed.

Adapters - Extensions - Reducers

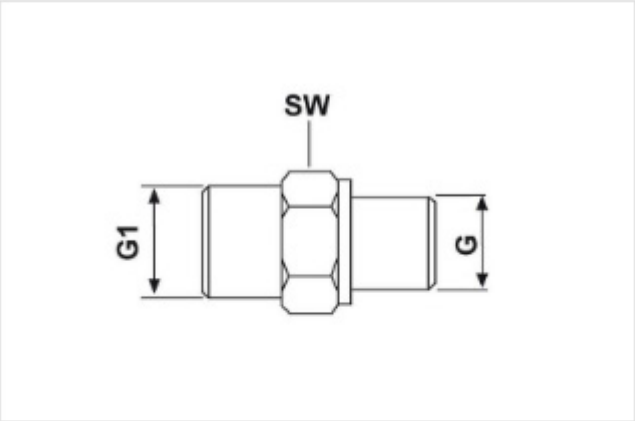

Steel zinc / steel zinc-nickel / CrVI free

Item No.	G	G1	SW	Bag	Box
100-209	1/4 BSPP	1/4 BSPP	17	5	100
100-209-20x1,5	1/4 BSPP	M 20 x 1,5	24	5	50
100-209-22x1,5	1/4 BSPP	M 22 x 1,5	24	5	50

ADAPTERS - EXTENSIONS - REDUCERS - BANJO 90° FREELY MOVABLE

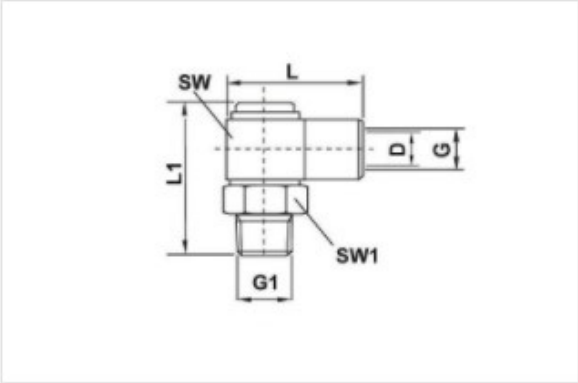

brass

Item No.	D	G	G1	SW	SW1	H	L	Bag	Box
104-172	4	M 8 x 1	M 8 x 1 tap	15	14	30	26,5	10	250
104-173	4	M 8 x 1	M 10 x 1 tap	15	14	30	26,5	10	250
106-172	6	M 10 x 1	M 8 x 1 tap	15	14	30	29	10	250
106-173	6	M 10 x 1	M10 x 1 tap	15	14	30	29	10	250
106-174	6	M 10 x 1	R 1/8 BSP keg	15	14	30	29	10	250

Steel, surface chrome-VI free, galvanised and brass

Item No.	D	G	G1	SW	SW1	H	L	Bag	Box
106-171	6	M 10 x 1	M 6 x 1 tap	15	14	30	29	10	250

Steel, surface chrome-VI free, galvanised

Item No.	D	G	G1	SW	SW1	H	L	Bag	Box
5031-104	6	1/8 NPT	1/8 NPT	1/2"	15	30	29	10	250

It is also possible to connect a lubrication line directly to a swivel joint.

Adapters - Extensions - Reducers - T-banjo

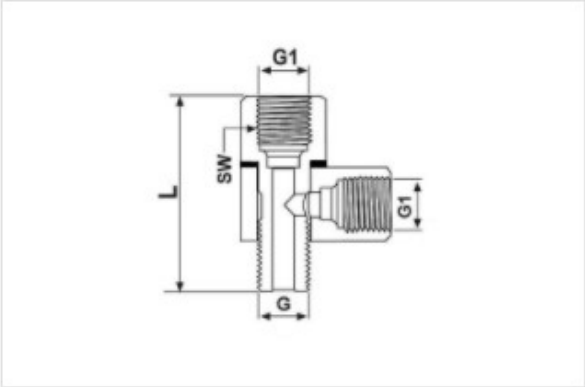

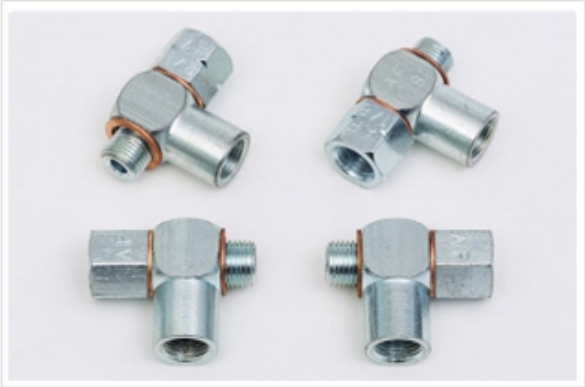

Steel, surface chrome-VI free, galvanised

Item No:	G	G1	G2	L	SW	Bag	Box
100-323	M 10 x 1	M 10 x 1	M 10 x1	35	14	50	250
100-324	1/8 BSP	1/8 BSP	1/8 BSP	35	14	50	250

Basic information

This banjo in T-piece design is a special gland for use at the input of a progressive distributor of a centralized lubrication system. Due to the special design of this elbow bolting, the main line of the central lubrication pump can be connected with the main distributor, respectively the high pressure hose can be connected from the pre-distributor to a sub-distributor.

In addition, there is also the possibility to screw in our high pressure grease nipple. This prevents the lubrication system from running without grease or lubricants in case there is a failure in the centralized lubrication system. With this lubrication nipple the distributor can be lubricated so that all lubrication points are supplied with grease and lubricants despite a failure in the centralized lubrication system.
Alternatively or additionally, a pressure gauge can be installed in order to control and monitor the pressure build-up of the central lubrication pump.

Adapters - Extensions - Reducers - Swivel Union Elbow

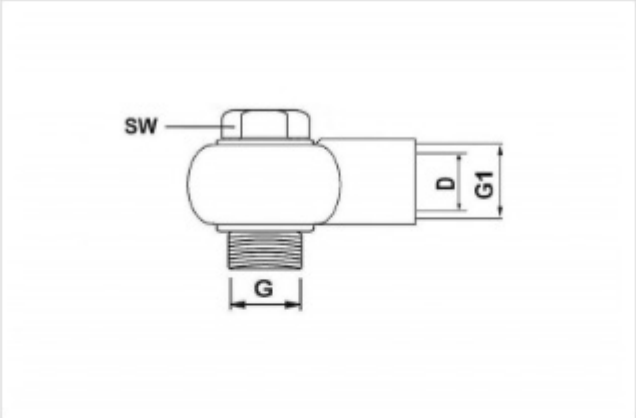

Steel zinc / steel zinc-nickel / CrVI free

Item No.	D	G	G1	SW	Bag
1022-106	4	M 6x0,75	M 8x1	9	50
1022-105	4	M 6x1	M 8x1	9	50

Accessories - Spring Coils - Stainless Steel 304

Short version

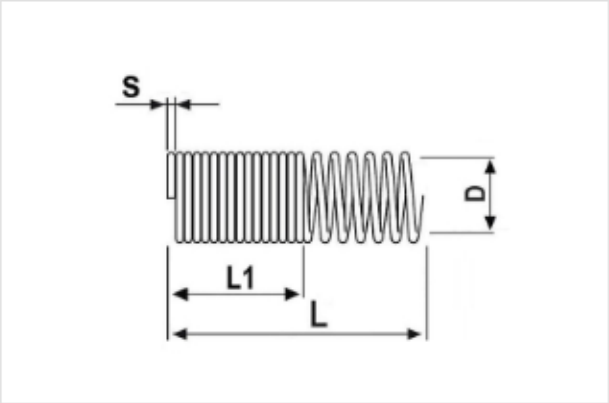

Stainless steel 1.4301 / V2A Spring coil short

Item No.	D	L mm	L 1	S	Bag	Box
100-045-VA	10,6	200	19,2	1,2	10	50

Long version

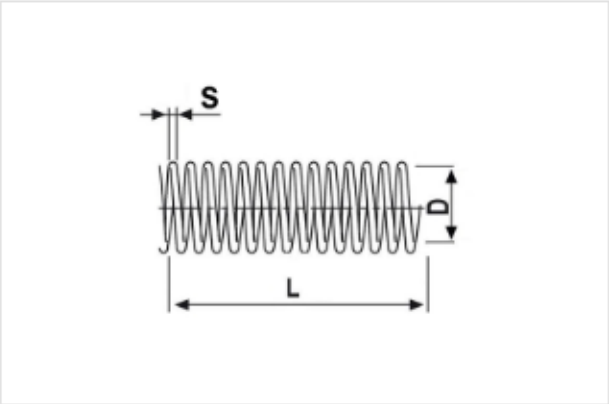

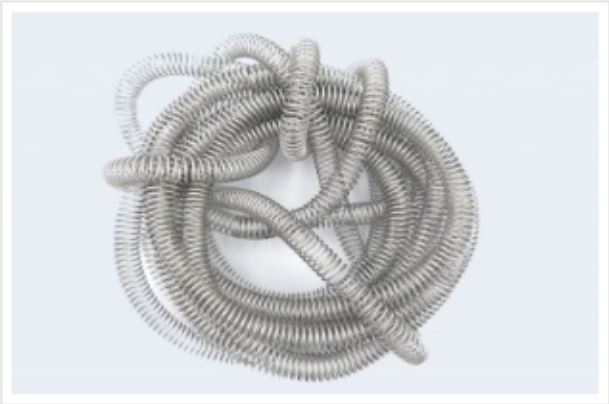

Stainless steel 1.4301 / V2A / 304

Item No.	D	L mm	S	Bag	Box
100-046-VA	10,6	2000	1,2	5	25
5037-101	13	2000	1,5	1	20
100-047-VA	10,6	5000	1,2	1	20

HIGH-PRESSURE HOSES - 840 BAR

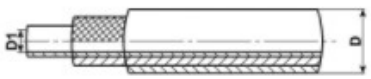

Item No.	D	D1	Grease	m / coil	Box	Palett
100-001	8,6	4,0	NLGI class 2	50 m	250	3000
100-002	8,6	4,0	empty	50 m	250	3000
100-011	11,3	6,3	NLGI class 2	100 m	200	2000
100-012	11,3	6,3	empty	100 m	200	2000
4010-100	5/16"	1/8"	empty	50 m	250	3000

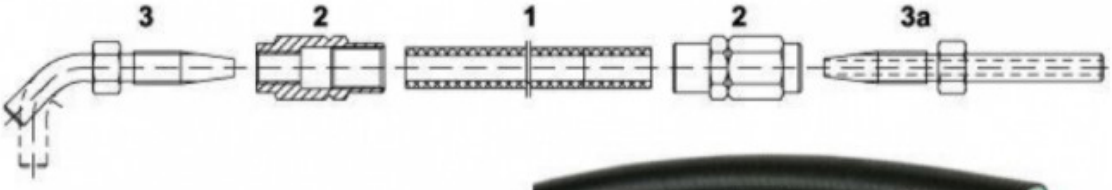

1 high pressure hose
2 screw sleeve
3 hose stud 45°
3a hose stud straight

After cutting the hose to the required size, grease first the nozzle tip of the hose stud before assembling. This avoids damages of the inner core of the hose.

Then screw the screw sleeve with the left- hand thread on the end of the hose. Leave a 2 mm space, see drawing.

Final, screw the hose stud with right-hand thread. Automatically, the high pressure hose is pressed pressure-resistant with the screw sleeve.

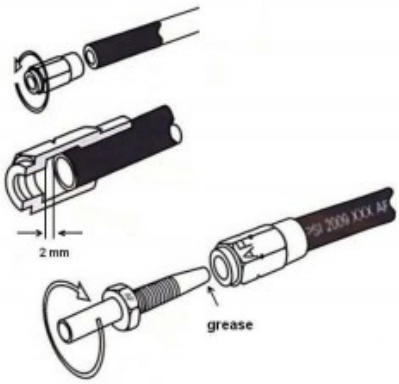

1. Designation

High pressure hose DN 4 / DN 6 filled

2. Trade name

100-001 high pressure hose 840 bar / D 8,75 | D1 4,1 | filled with gerase NLGI class 2*
100-011 high pressure hose 840 bar / D 11,3 | D1 6,35 | filled with gerase NLGI class 2*
*) please consider item 6

2. Material / material performance

inner tube: Polyamid 6, weich (thermopl. Polyamid 6)
casing: high tensile polyester braid with polyurethane cover
The pressure reinforcement is glued with the inner hose.

temperature using limit: - 40° bis + 80°C
For mediums to be pumped with "grease with corrosion protection additives": max. 60° C
nonhalogen under the standard DIN VDE 0472-815

3. Pressure reinforcement / pressure strength

bursting pressure (EN ISO 1402, pressurisation: 60 s)			operating pressure reference*		
20°C	(bar)	60°C	statistically	(bar)	dynamically
> 840		> 460	max. 280		max. 210

Technically correct diagonal reinforcement of polyester, high-strength bonded to the inner tube.
*) common coefficient of safety: stat. pressure load: 3, dyn. pressure load: 4

4. Sizes / tolerances in mm / bending radius

sizes / tolerances	**100-001**	**100-011**
nominal size	4,0 x 8,6 d (inner x outer) mm	6,35 x 11,3 mm (inner x outer)
inner diameter	3,90 – 4,10 mm	6,2 – 6,5 mm
external diameter	8,50 – 8,75 mm	11,1 – 11,5 mm
allowed bending radius (20°)	> 20 mm	> 45 mm

5. Color

inner tube:	nature
casing:	black
reinforcement:	white
printing:	white

6. Grease AF-2 NLGI 2 400-001 - EP-multipurpose lithium-based grease

Grease 400-001 is natural colored lithium based EP Multipurpose grease with distinct high pressure additivation. Grease 400-001 is also additivated with components for an increasing oxidation stability and corrosion protection.

Grease 400-001 is for applications like roller bearings with high and temporary jerky compressive load and vibrations at normal and increasing temperatures. Based on the smooth texture is Grease 400-001 excellent pumpable in all kinds of central lubrication systems and ensured also the application in machines with increasing requirements.

Characteristics:

- provides protections against frictional corrosion and abrasion
- application temperatures from -30°C to +120°C, temporary up to 130°C
- does not contain solid lubricants
- oxidation resistant and stable while penetration
- water resistant and adherent
- good corrosion protection and high ability of pressure absorption

Technical facts:

NLGI grade	2	DIN 51818
Viscosity at +40 °C	190 mm²/s	DIN EN ISO 3104
Drop point	190 °C	DIN ISO 2176
Stability while penetration	280 till 310	DIN ISO 2137
Water resistance	*1 – 90*	*DIN 51807*
Corrosion protection	Grade 0/0	DIN 51802
Copper corrosion	1 – 100	DIN 51811
SKF-running test 120 °C	Passed	DIN 51806
Lubricating grease period of usage at 120 °C	F_{50} >150 h	DIN 51821
Soap base	Li-12-Hydroxystearat	DIN 51558

(The stated technical facts are average values.)

Tube Assembly

Grease the hose's (Y) ends and install sleeves (X) by screwing counter-clockwise.

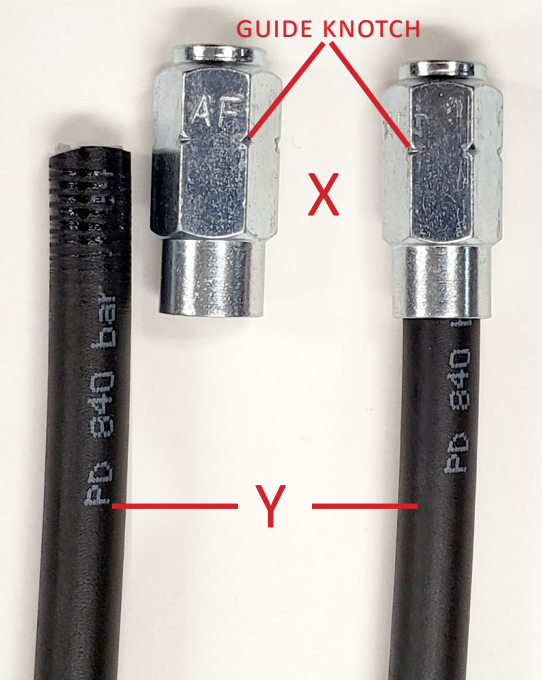

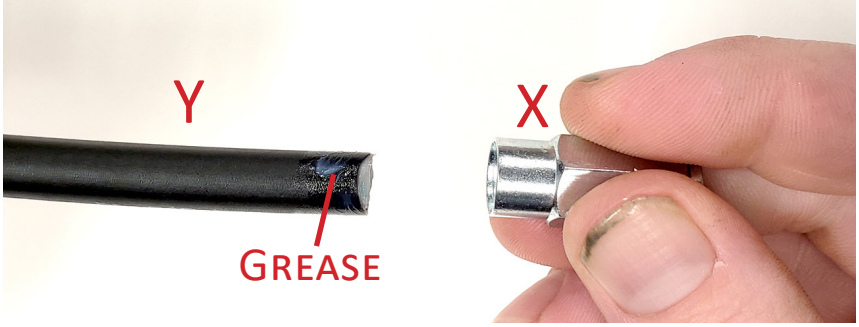

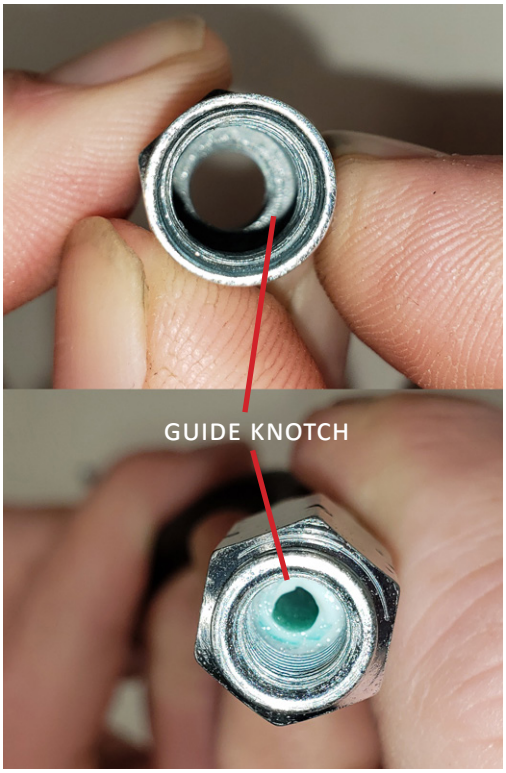

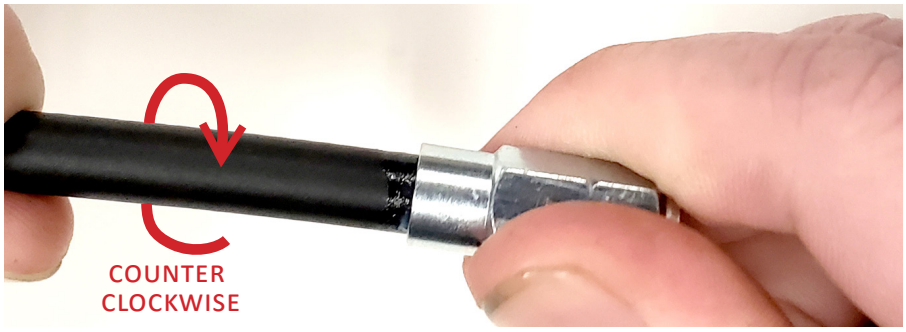

Use a 12mm wrench to tighten the threaded sleeve to the hose, in a clockwise motion. Making sure that the hose is installed up to the guide knotch.

Install the hose stud (Z) by screwing clockwise.

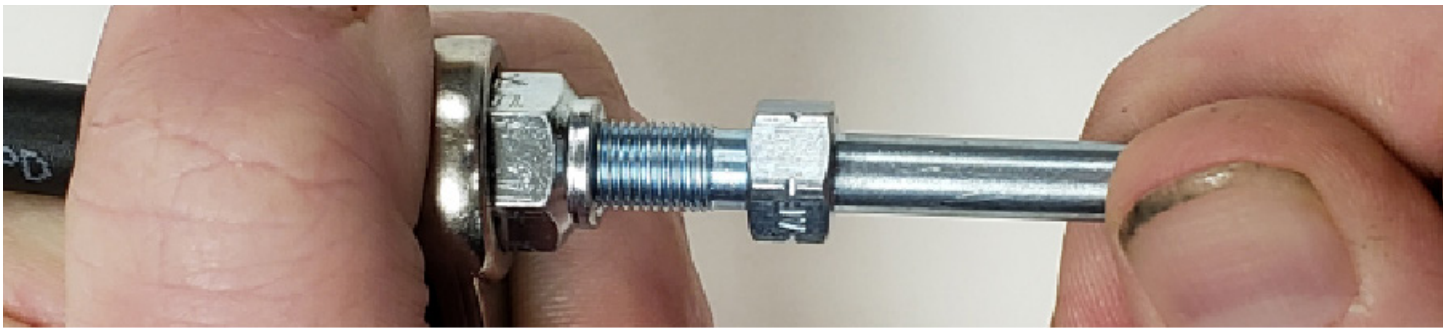

Use a 10mm wrench to tighten the hose stud to the sleeve, in a clockwise motion.

Making sure that the stud is tight, be aware that there should not be a gap.

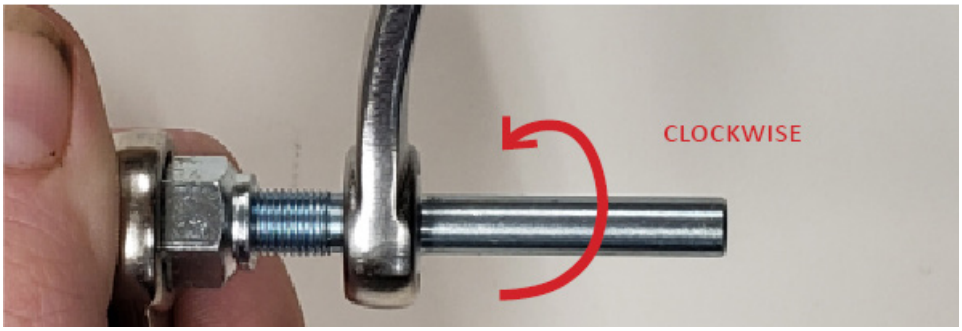

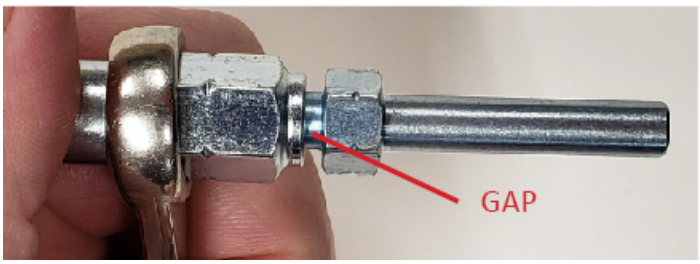

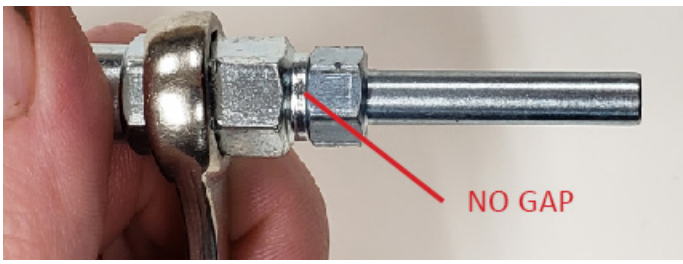

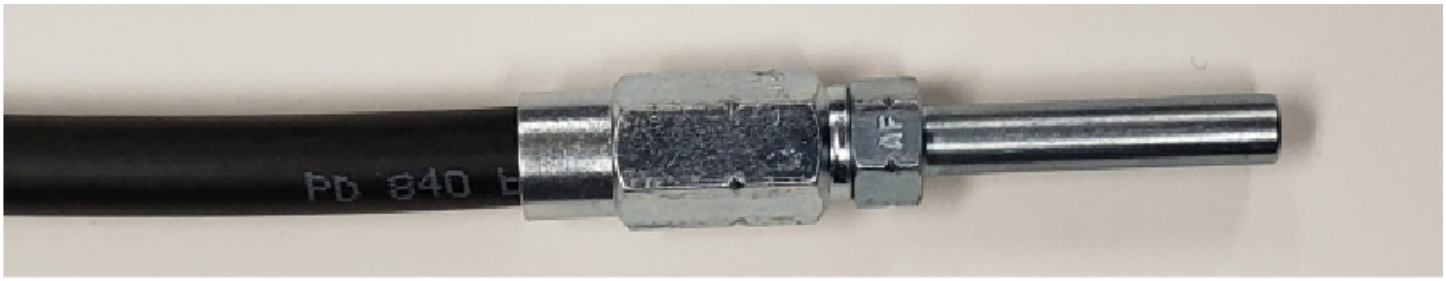

Tube Sockets - Tube Studs - Hose studs - Male Stand Pipes - Straight

Make sure the ferrule is seated as shown - with the shoulder or large end towards the cap screw.

Insert the hose stud into the hose fitting as shown

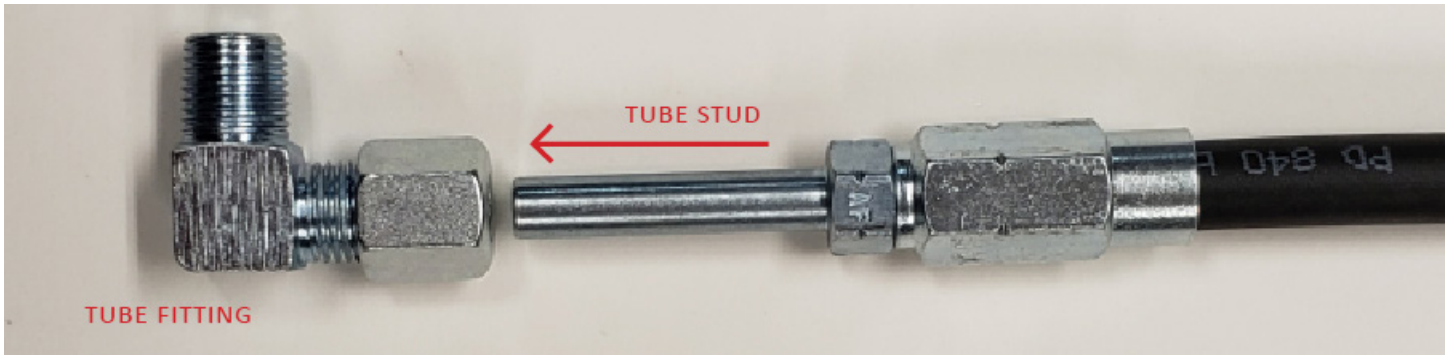

Use a 12mm wrench to tighten the cap screw, in a clockwise motion.
Make sure that the hose stud is inserted all the way into the hose fitting.

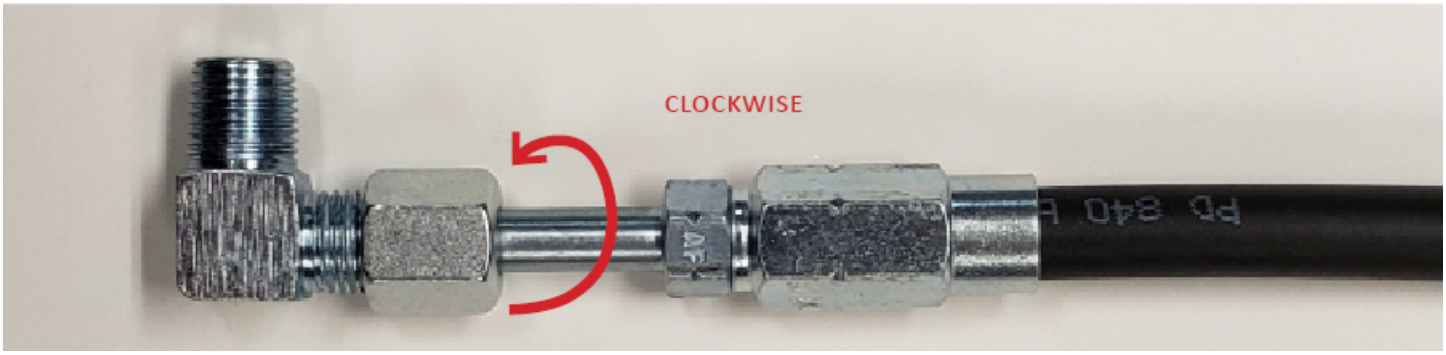

HOSE ASSEMBLY

Hose Routing requires either the use of weld studs, or pre-engineered weld mounting bars.

Although welding on mobile equipment is always subject for concern, it is important to understand that factory lubrication installations require the use of welding or drilling on the machine to mount lubrication equipment.

Use the tubing cutter to cut the hoses on site, leaving some slack until you are ready to connect to the lube point.

• Identify the internal and external pivot points to ensure proper hose lengths are applied.

If hoses are too short, they will bind and eventually break.

If hoses are too long, they can easily get snagged on external debris, or pinched in the machine and break.

• The hoses must fit the machine. Use existing hydraulic and electrical routing from the OEM. This will ensure the lines are protected and routing is relatively similar to the OEM equipment.

• Hoses should not be hanging or dangling from the machine. Hoses should be routed neatly and kept close to the frame of the machine. This will provide added protection from debris and reduce the chance of hoses being snagged from the equipment terrain.

• Care must be taken to ensure hose runs are installed to move with the machine. To make the lube system part of the machine consideration must be given to the many pivot, oscillation, extension and pinch point areas of a equipment. Before cutting and securing hoses, have a qualified technician move the various parts of the machine to ensure proper routing is achieved.

• Look for access points. Utilize grommets, supports, or cutouts in equipment's frame. Routing hoses through these areas keeps the hoses inside the machine and provides protection. It will also provide a cleaner, more professional looking installation.

• Keep hose runs secured, wrapped, and guarded to reduce the chance of failure in the field. When mounting hoses, identify if there are any added steps that should be taken to ensure they have been protected properly. Sometimes adding extra spiral wrap to band hoses together or adding steel spiral guard can make a very big difference in performance.

• Number Tags correspond to the block diagram sheet (page 10) that is generated per equipment and should be used to identify the hose runs and the locations from the divider valve to make installation and troubleshooting easier.

Scan the QR code above and scroll down to Watch our video on 8mm Hose Assembly

The hose in the kit is provided in bulk and the fittings are field installable; a crimper is not required.

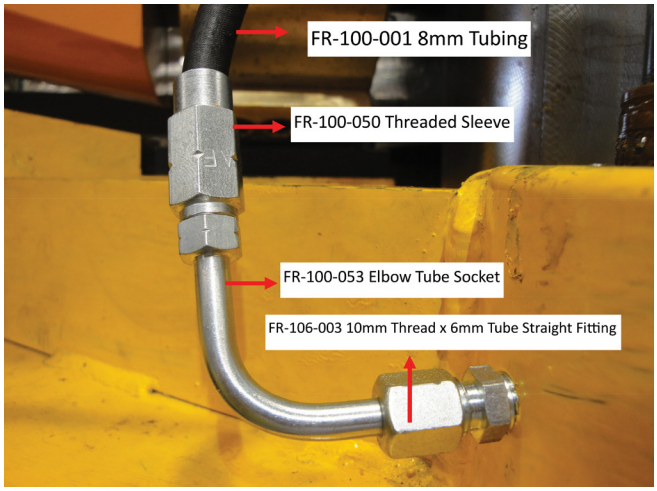

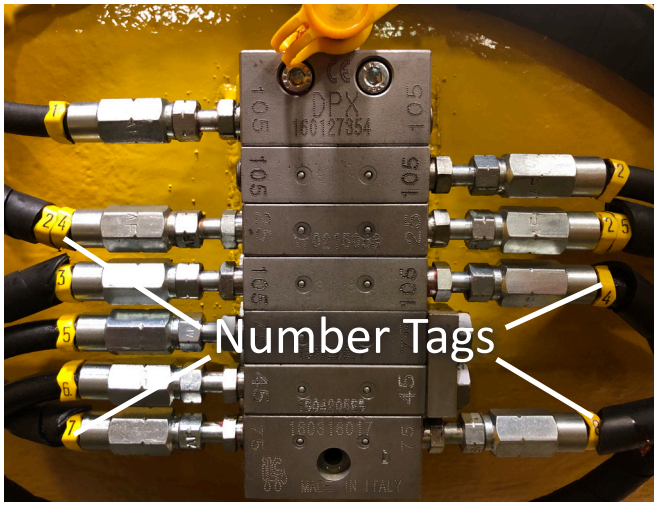

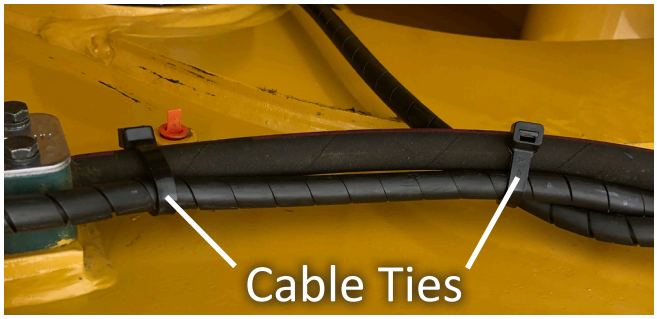

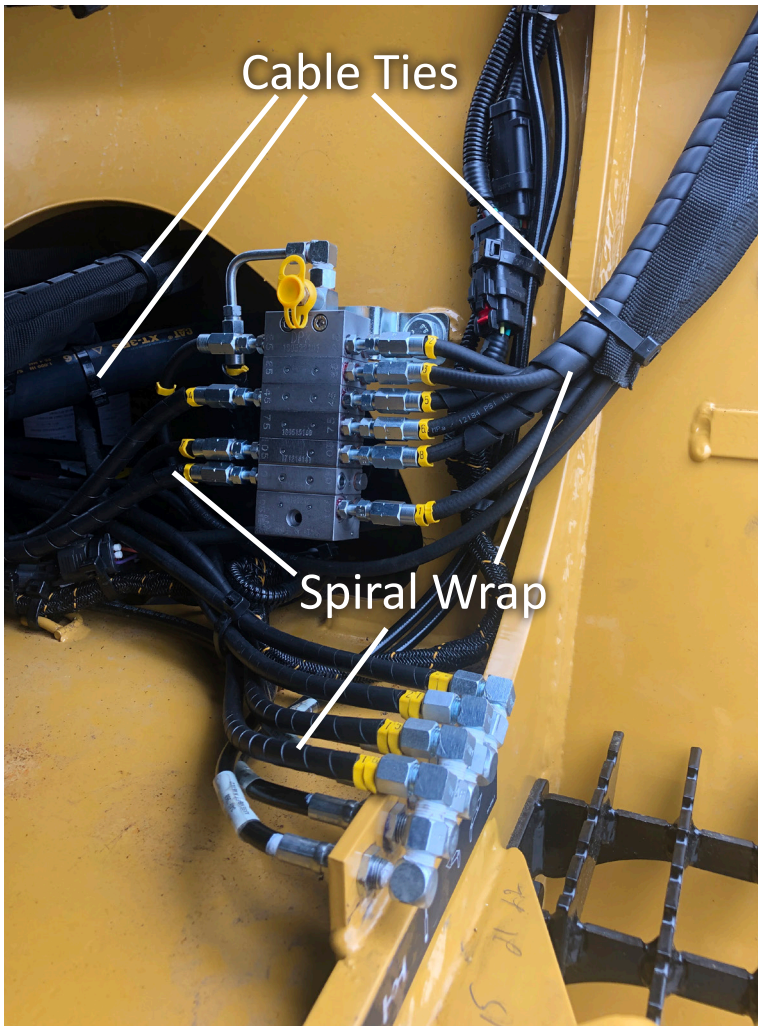

Plastic Tubes Semi-Rigid - Flexible PA 12 HL, PA 12 PHL

Plastic tubes / nylon tubings semi rigid PA 12 HL

DIN 73378

Operative pressure for Ø 4 x 0,85 and 23°C: approx. 1044 PSI / 7 MPA / 72 bar
Operative pressure for Ø 6 x 1,25 and 23°C: approx. 1015 PSI / 7 MPA / 70 bar
Operative pressure for Ø 6 x 1,5 and 23°C: approx. 1291 PSI / 9 MPA / 89 bar

Item No.	Color	Material	Dimension	Grease	D	D1	S	m / coil	Box	Palett
100-010	black	PA 12 HL	4 x 0,85	unfilled	4	2,3	0,85	50	1500	5000
100-010-T	transparent	PA 12 HL	4 x 0,85	unfilled	4	2,3	0,85	50	1500	5000
4511-100	black	PA 12 HL	4 x 0,85	NLGI class 000	4	2,3	0,85	50	1500	5000
100-009-25	black	PA 12 HL	6 x 1,5	NLGI class 2	6	3,0	1,5	25	750	4000
100-004	black	PA 12 HL	6 x 1,5	NLGI class 000	6	3,0	1,5	100	500	4000
100-003-25	black	PA 12 HL	6 x 1,5	unfilled	6	3,0	1,5	25	750	4000
100-003	black	PA 12 HL	6 x 1,5	unfilled	6	3,0	1,5	100	500	4000
4510-001	transparent	PA 12 HL	6 x 1,25	unfilled	6	3,5	1,25	100	500	4000

Plastic Tubes Semi-Rigid - Flexible PA 12 HL, PA 12 PHL

Plastic tubes / nylon tubings flexible PA 12 PHL

DIN 73378
Operating pressure:
100-005 / 100-006 approx. 39 bar / 570 PSI / 4 MPA
100-006-T approx. 36 bar / 522 PSI / 3,6 MPA
100-007 approx. 44 bar / 640 PSI / 4,4 MPA

Item No.	Color	Material	Dimension	Grease	D	D1	S	m / coil	Box	Palett
100-005	black	PA 12 PHL	4 x 0,85	NLGI class 000	4	2,3	0,85	50	1500	5000
100-006	black	PA 12 PHL	4 x 0,85	unfilled	4	2,3	0,85	50	1500	5000
100-006-T	transparent	PA 12 PHL	4 x 0,85	unfilled	4	2,3	0,85	50	1500	5000
100-007	black	PA 12 PHL	6 x 1,5	unfilled	6	3,0	1,5	100	500	4000

Our plastic tubes / tube lines are used in lubrication systems to connect the progressive distribution unit with the lubrication point or the relubrication distributor (or piston distributor) to the lubrication point.

Mounting advise:
Please do always use reinforcing sockets for plastic tubes with diameter 4x 0,85 and 6x1,25

Technical informations:

Material:
Plastic tube, semi-flexible: PA 12 HL
Plastic tube, flexible: PA 12 PHL

Standard: DIN 73378

Material properties:
All types of plastic tubes (PA 12 HL, PA 12 PHL) are free of plasticisers, and resistant to light or heat-induced ageing.

Permissible media:
Excellent resistance to oil, grease and lubricants, and to all types of fuels and chlorine-free cleaning agents and solvents.
Application for other media than those stated above, only upon request!

Permissible operating temperature: ca. – 60 °C to + 80 °C

The permissible operating pressures according to DIN 73378 are calculated by means of the following formula

$$P = \frac{20 \cdot \sigma V \cdot s \text{ (Nenn)}}{dm}$$

s = nominal wall thickness [mm];
dm = da – s;
σV = reference stress N/mm2 at 23 °C

Plastic Tubes Semi-Rigid - Flexible PA 12 HL, PA 12 PHL

Important advice for assembly!

Our PA12HL plastic tubes according to DIN 73378 in the dimension 6x1.5 (i.e. 6 mm outer diameter and 1.5 mm wall thickness = 3 mm inner diameter) are also referred to as poly tube 6x3. For these tubes, use of a push-in socket is **not** required. Assembly together with a cutting ring fitting, equal to use of our push-in fitting, is easy and straight forward.

In contrast to that, push-in sockets or reinforcement sockets must be used for PA 12 PHL polyamide tubes with wall thickness of 0.85 mm.
Please note that push-in sockets that are "lost" or "forgotten" during assembly, may result in severe problems and major damage.
As a general rule, we recommend using push-in sockets if the wall thickness of a plastic tube is </= 1.25 mm.

In our capacity as manufacturer, we would like to make our customers aware that assembly of our components for central lubrication (tubes, hoses, screw fittings, ...) must only be performed by appropriately trained and qualified personnel.

In borderline cases, it is advisable to consult us beforehand. Have the tubes mounted only by qualified and/or accordingly trained personnel.

The warranty claims are limited to the specification of this technical data sheet. Further warranties will not be accepted.